Fundamentals of Photographic Cameras

Optical Engineering

Prof. Elias N. Glytsis

School of Electrical & Computer Engineering
National Technical University of Athens

Image Formation

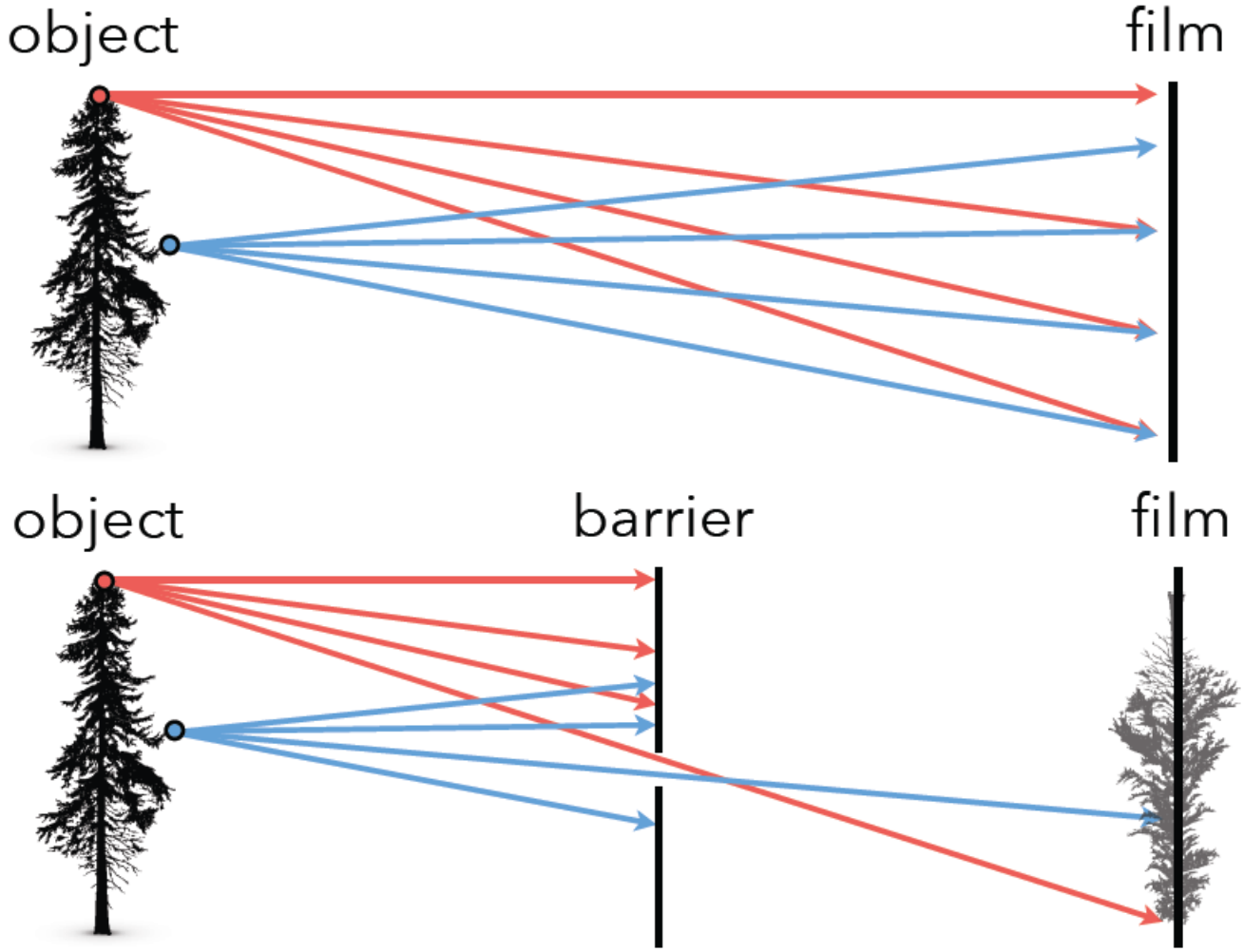

https://www.cs.dartmouth.edu/~wjarosz/courses/cs89-fa15/schedule.html

Pinhole Camera

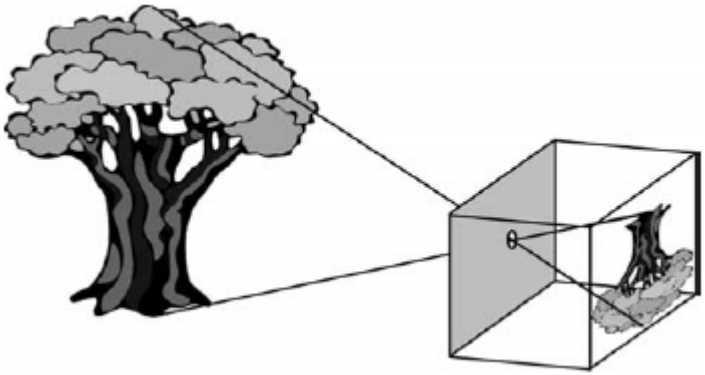

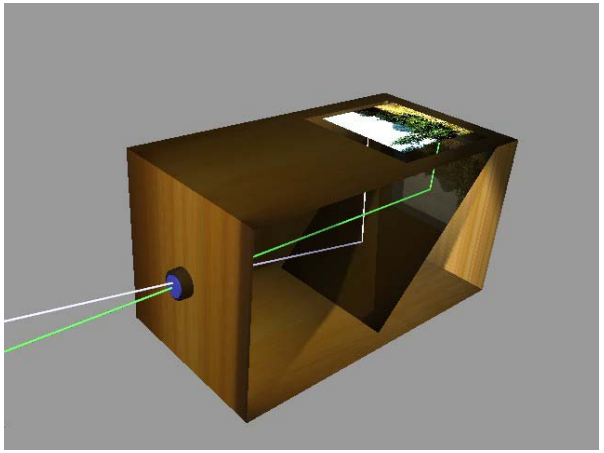

http://en.wikipedia.org/wiki/File:Camera_obscura_box.jpg

Pinhole Camera with a mirror

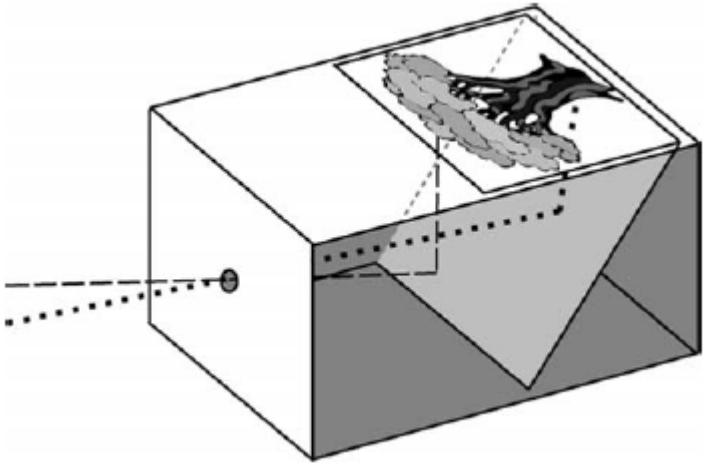

Camera Obscura

Camera Obscura, Gemma Frisius, 1558

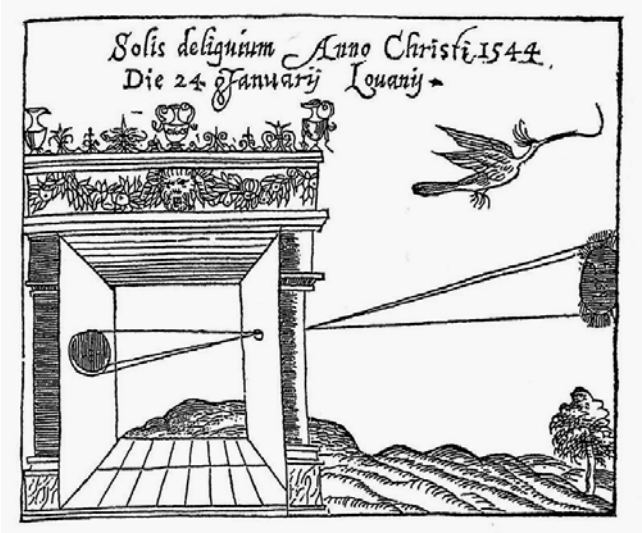

Camera obscura, from a manuscript of military designs. 17th century, possibly Italian.

http://en.wikipedia.org/wiki/File:Camera_obscura2.jpg

Camera Obscura with Lens

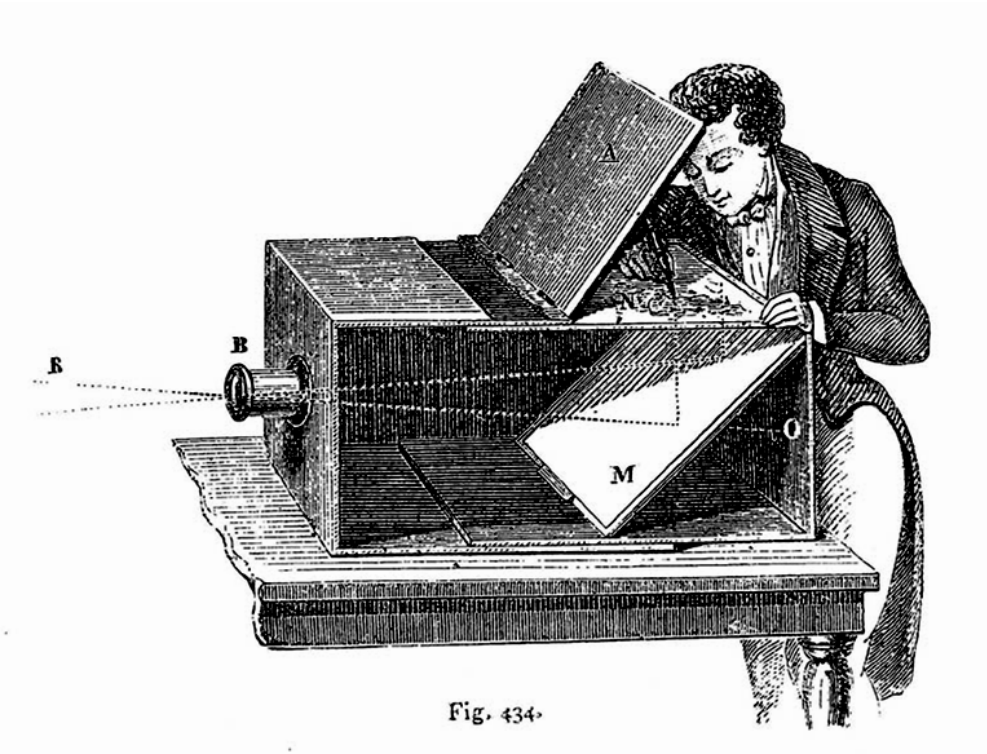

Lens Based Camera Obscura, 1568

History of Photography-Camera Obscura

https://cdn.tutsplus.com/photo/uploads/legacy/175_historypart1/2.jpg

History of Photography - Summary

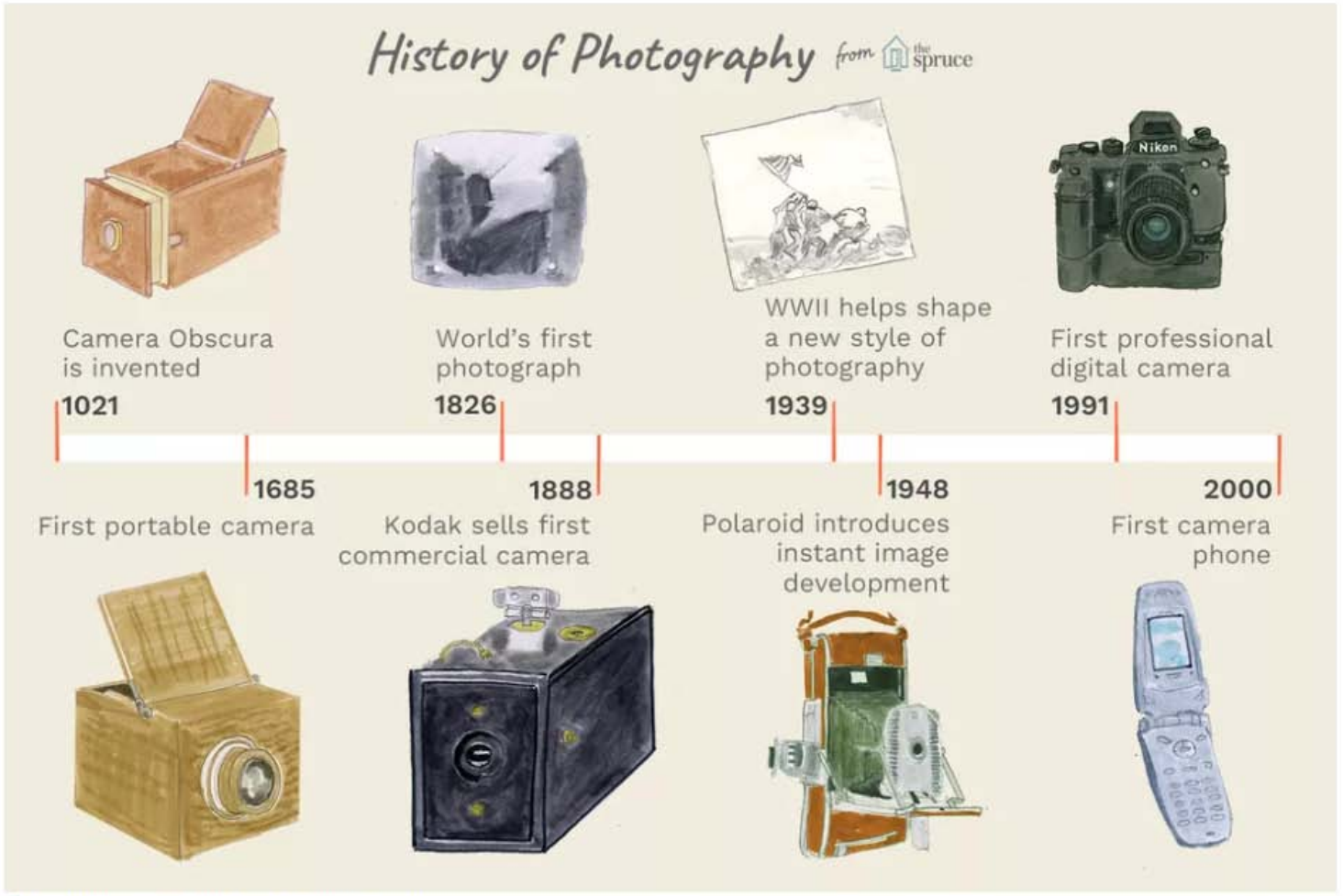

https://www.thesprucecrafts.com/brief-history-of-photography-2688527#:~:text=The%20basic%20concept%20of%20photography,projected%20them%20onto%20another%20surface.

History of Photography - Asphalt on Metal Process (1826-1827)

Joseph Nicephore Niépce
1765-1833

- Exposure time was **> 8 hours!**
- A varnish was used on a metal (pewter, zinc, etc.) and then hardened when exposed to light

View from the Window at Le Gras 1826 or 1827, believed to be the earliest surviving camera photograph. Original (left) & colorized reoriented enhancement (right).

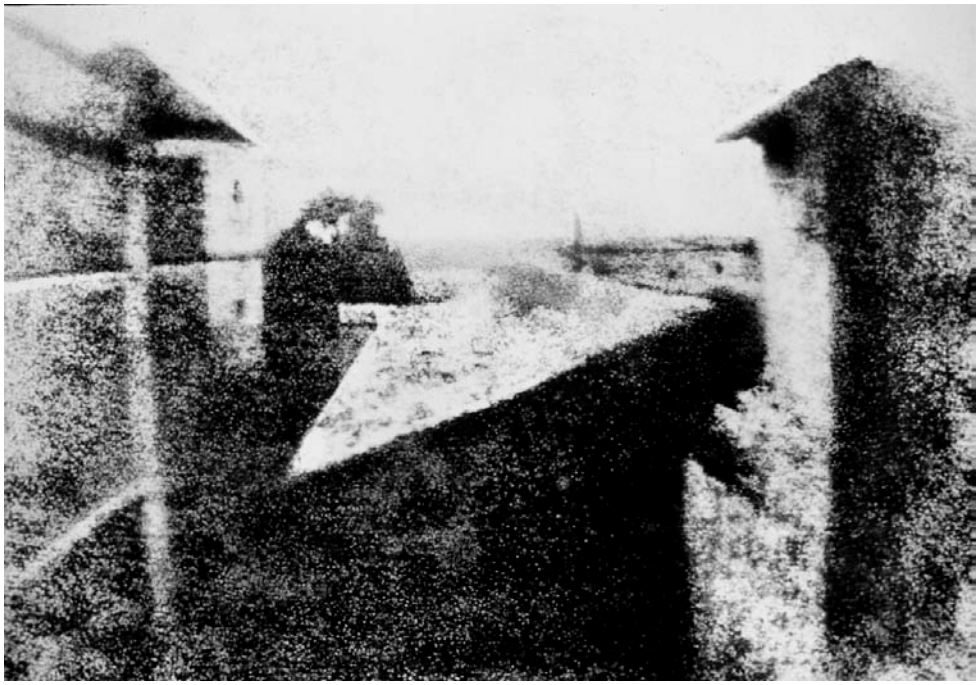

Retouched version of the earliest surviving camera photograph, 1826 or 1827 (was taken by a French inventor Joseph Nicephore Niépce), known as *View from the Window at Le Gras*

https://en.wikipedia.org/wiki/File:View_from_the_Window_at_Le_Gras,_Joseph_Nic%C3%A9phore_Ni%C3%A9pce.jpg

https://en.wikipedia.org/wiki/History_of_photography

History of Photography-Daguerreotype Process (1839)

Luis Daguerre
1787-1851

- Called Daguerreotype
- Exposure time in several minutes

The first ever picture to have a human in it was Boulevard du Temple by Louis Daguerre taken in 1839. The exposure lasted for about 10 minutes at the time, so it was barely possible for the camera to capture a man on the busy street, however it did capture a man who had his shoes polished for long enough to appear in the photo.

https://cdn.tutsplus.com/photo/uploads/legacy/175_historypart1/7.jpg

- A copper plate was coated with silver and exposed to iodine vapor before it was exposed to light.
- To create the image on the plate, the early daguerreotypes had to be exposed to light for up to 15 minutes.
- The daguerreotype was very popular until it was replaced in the late 1850s by emulsion plates.

https://www.thesprucecrafts.com/brief-history-of-photography-2688527#:~:text=The%20basic%20concept%20of%20photography,projected%20them%20onto%20another%20surface.

Daguerreotypes Early Examples

Self-portrait of photographer Robert Cornelius is believed to be the first daguerreotype taken in North America.

This French daguerreotype of an arrest in 1847 might be the first-ever news photograph.

http://mentalfloss.com/article/52299/8-important-daguerreotype-photos

Daguerreotypes Early Examples

Hutchinson Family Singers (1845)

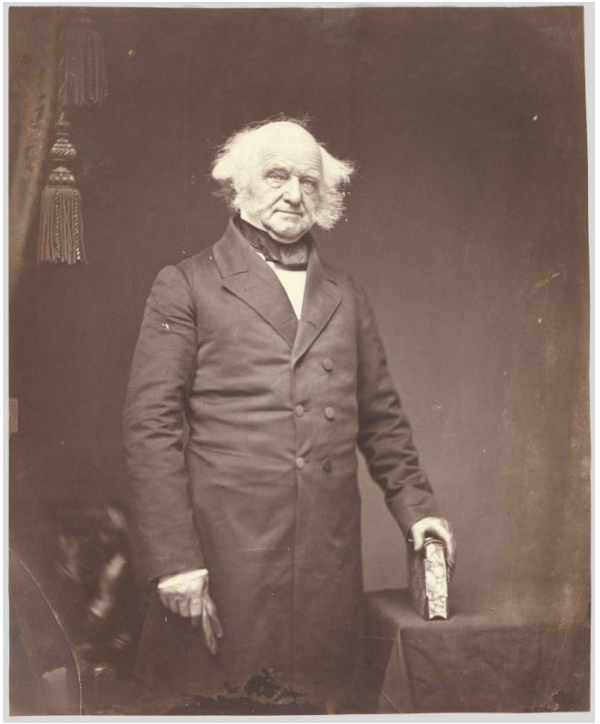

President Martin Van Buren (1855-1858)

https://www.metmuseum.org/toah/hd/adag/hd_adag.htm

History of Photography-Calotype Process (1841)

William Henry Fox Talbot
1800-1877

- Used a paper negative
- Prints could be made by placing negative on top of photo paper and exposing to sunlight
- Exposure time still long: 1-2 min

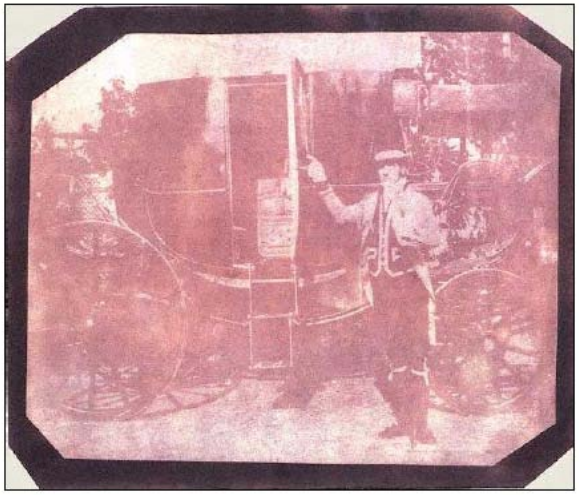

negative to positive photographic process (1841)

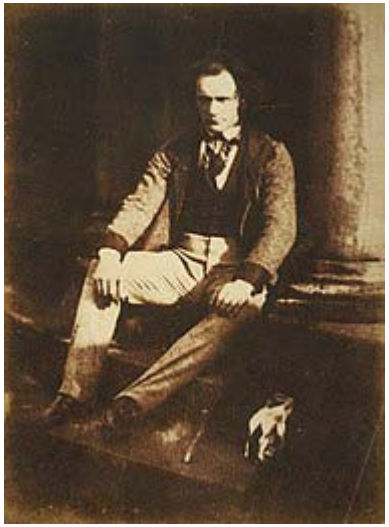

Thomas Duncan, by Hill & Adamson, c. 1844; calotype print, size: 19.60 x 14.50 cm; from the collection of the National Galleries of Scotland

https://upload.wikimedia.org/wikipedia/commons/thumb/f/f6/Thomas_Duncan%2C_1807_-_1845.jpg/190px-Thomas_Duncan%2C_1807_-_1845.jpg

A salted paper calotype photograph of Scottish amateur golfer, golf-administrator, and aristocrat James Ogilvie Fairlie, (1846-49)

https://upload.wikimedia.org/wikipedia/commons/thumb/9/9e/James_Ogilvie_Fairlie_1840s_salt_paper_%28calotype%29.PNG/190px-James_Ogilvie_Fairlie_1840s_salt_paper_%28calotype%29.PNG

History of Photography - Collodion Process (1851)

Frederic Scott Archer
1813-1857

1867. Collodion wet plate process.
GERONA.- *Puente de Isabel II*. Ministry of Education, Culture and Sport (Spain).

https://en.wikipedia.org/wiki/Collodion_process

- Used glass instead of paper for negatives
- Images were much clearer, sharper
- Shorter exposure times (2-3 secs.)
- Photographers could shoot more than still lives, portraits
- Wet process, required portable darkroom

History of Photography-Collodion Process (1851)

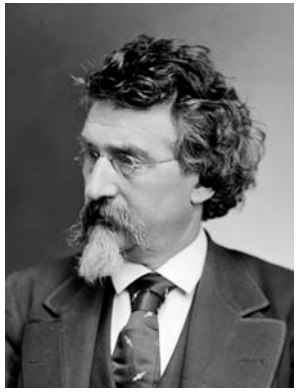

Mathew Brady
1822-1896

- Used collodion process to document the Civil War (1861-65)
- Team of 20 photographers who took most of pictures

Photo by Mathew Brady, Union soldier by gun at US Arsenal, Washington DC, 1862

https://www.thefamousbirthdays.com/photo/commons/d/d0/wk_52190_34504_large.jpg

History of Photography-Collodion Process (1851)

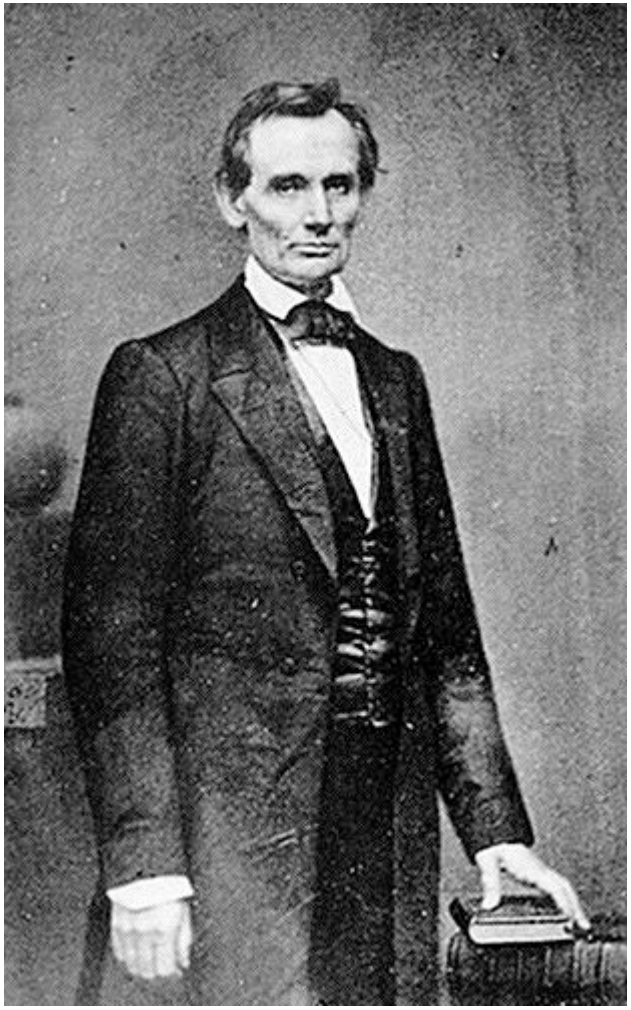

The most famous of the beardless poses of **A. Lincoln,** taken by Mathew B. Brady on Monday morning, February 27, 1860.

https://encrypted-tbn0.gstatic.com/images?q=tbn:ANd9GcQtOJrq9vqdwzydPqG89vJ1Ad-r4TmAVWfG7TUSo85fFzKbUM-dKg

History of Photography – Gelatin Emulsion Process (Dry Plate) (1871)

Richard Leach Maddox
1816-1902

A gelatin silver print of a Hawaiian girl

The gelatin silver print or gelatin developing out paper (DOP) is a monochrome imaging process based on the light sensitivity of silver halides. They have been made for both contact printing and enlarging purposes by modifying the paper's light sensitivity. A brief exposure to a negative produces a latent image, which is then made visible by a developing agent. The image is then made permanent by treatment in a photographic fixer, which removes the remaining light sensitive silver halides. And finally, a water bath clears the fixer from the print. The final image consists of small particles of silver bound in a layer of gelatin. This gelatin image layer is only one of the four layers found in a typical gelatin silver print, which typically include the overcoat, image layer, baryta, and paper support.

https://en.wikipedia.org/wiki/Gelatin_silver_process

History of Photography-Motion in Photography (~1872)

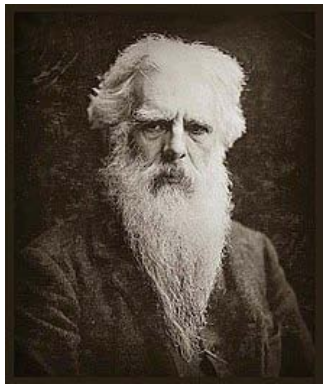

Eadweard Muybridge
1830-1904

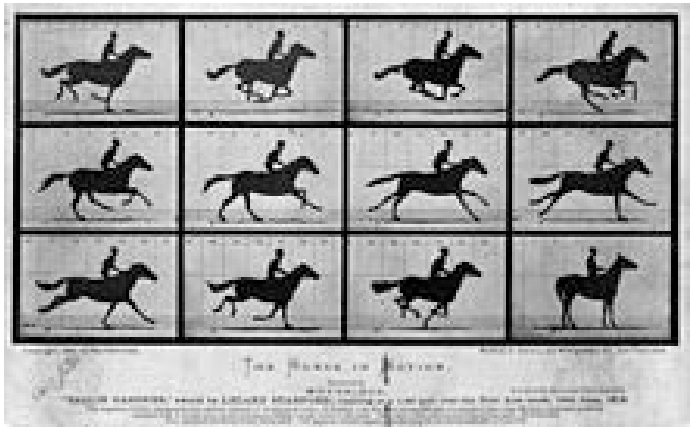

Muybridge's *The Horse in Motion*, 1878

https://en.wikipedia.org/wiki/Eadweard_Muybridge

Photo of Vernal Falls at Yosemite
by Eadweard Muybridge, 1872

- Paved way for motion picture photography
- Known for photo sequences"*Galloping Horse*" - 1878

History of Photography - Photography Available to Masses (1900)

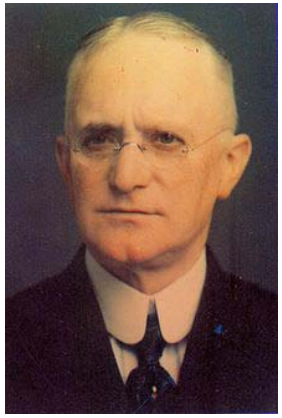

George Eastman
1854-1932

- Introduced photography to masses
- Flexible film invented 1884
- Four years later Kodak came out with box camera including roll of film
- Sent box in for development

The Kodak "Brownie" (1900) camera made its debut at the turn of the twentieth century and sold for one dollar. One hundred thousand of them were purchased during the first year alone. The Brownie helped to put photography into the hands of amateurs and allowed the middle class to take their own "snapshots" as well.

http://www.fotovoyage.com/the-kodak-brownie-1900/

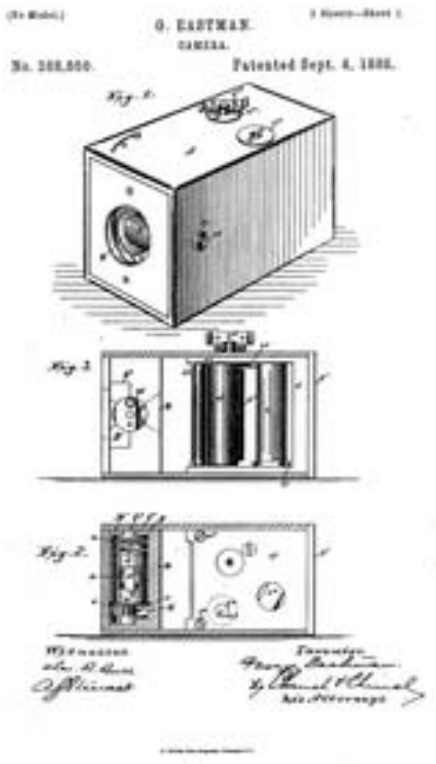

U.S. patent no. 388,850, issued to **George Eastman**, September 4, 1888

https://en.wikipedia.org/wiki/George_Eastman

History of Photography-First Color Picture (1861)

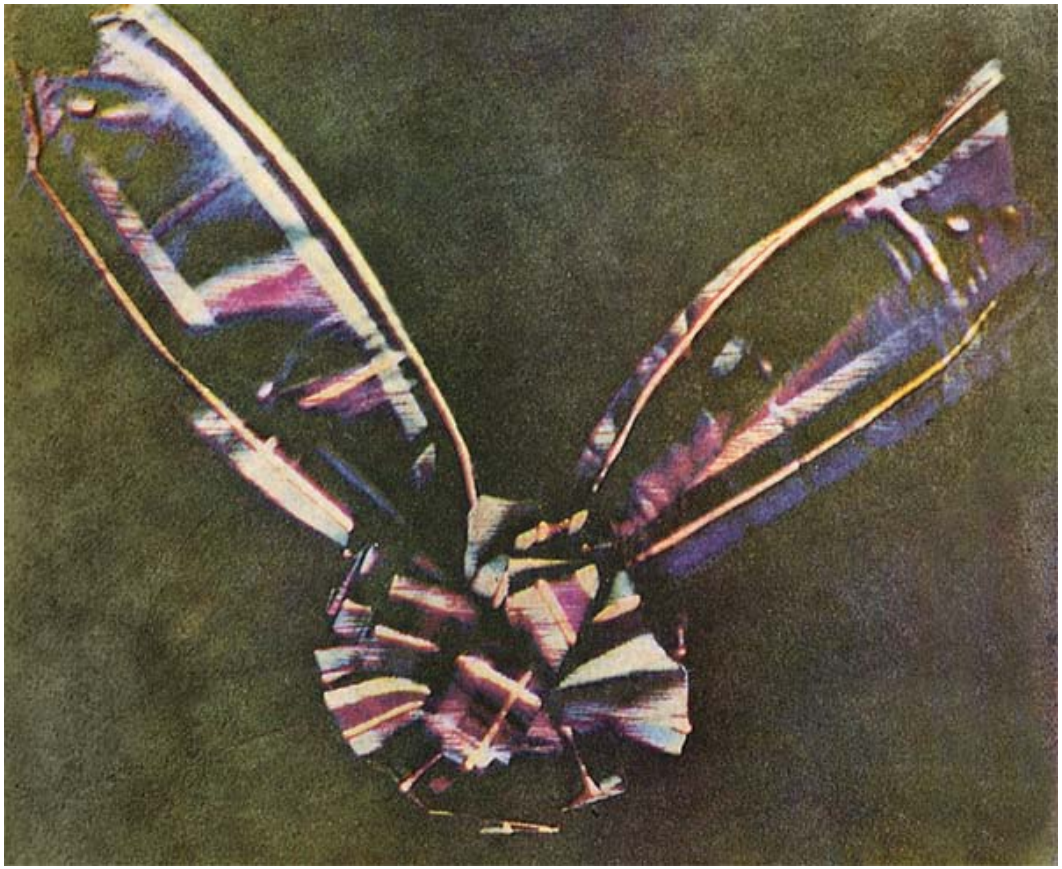

The first color photo made by the three-color method (suggested by Maxwell in 1855), an image of a tartan ribbon, was taken in 1861 by the famous Scottish physicist James Clerk Maxwell who was famous for his work with electromagnetism. Despite the great influence his photograph had on the photo industry, Maxwell is rarely remembered for this. The reason for that is his inventions in the field of physics simply overshadowed this accomplishment.

https://cdn.tutsplus.com/photo/uploads/legacy/175_historypart1/6.jpg

History of Photography-First Digital Picture (1957)

The first digital photo actually in **1957** when **Russell Kirsch** made a 176×176 pixel digital image by scanning a photograph of his three-month-old son. The low resolution was due to the fact that the computer they used wasn't capable of storing more information.

https://petapixel.com/2010/11/04/first-digital-photograph-ever-made/

History of Photography-Digital Photography

- Digital cameras were needed for space applications (*Jet Propulsion Lab* – 1965)

- In the late 1960s, Willard S. Boyle and George E. Smith, two physicists with *Bell Labs, Inc.*, invented the charge-coupled device (CCD), a semiconductor circuit later used in the first digital video cameras for television broadcasting. Their invention was recognized by a Nobel Prize in Physics in 2009.

https://i.ytimg.com/vi/eIHZLznJMVo/hqdefault.jpg

The camera generally recognized as *the* first digital camera was a prototype (US patent 4,131,919) developed by Eastman Kodak engineer **Steven Sasson** in 1975. He cobbled together some Motorola parts with a Kodak movie-camera lens and some newly invented Fairchild CCD electronic sensors.

Weighed nearly 4kg! Black-and-white images were captured on a digital cassette tape, and viewing them required Sasson and his colleagues to also develop a special screen.
The resolution was a revolutionary .01 megapixels and it took 23 seconds to record the first digital photograph.

https://www.cnet.com/news/photos-the-history-of-the-digital-camera/

History of Photography-Digital Photography

1990 Dycam Model 1

Dubbed “the Brownie of the personal computing set” by the New York Times, the first digital camera to reach the U.S. consumer market proved too expensive ($600) and too rudimentary (376x240 pixels, B&W) to really sell well, but it found some buyers among real-estate agents and insurance adjusters. (1990)

1991 Kodak DCS

Using 1.3 megapixel Kodak CCD with a color filter array invented by Bryce Bayer, the first commercial digital SLR was a Nikon F3 body whose film chamber and winder were gutted to make room for the sensor and electronics. The photographer needed to schlep a separate storage unit, worn on a shoulder strap and
connected via cable.

1997 Sony Digital Mavica MVC-FD5/FD7

The MAgnetic VIdeo CAmera line debuted as analog still video in 1981, and went truly digital with the FD5 and its 10x-zoom-equipped twin, the FD7. These got millions of consumers into the habit of popping their digital memory out of their camera and into a computer drive—a floppy-disk drive, in this case. Mavicas once accounted for 40 percent of U.S. digital camera sales.

https://www.popphoto.com/gear/2013/10/30-most-important-digital-cameras#page-4

History of Photography-Digital Photography

1999 Kyocera VP-210

Imagine people wanting to take pictures with their phones! Kyocera did, with the Japan-only VP-200. It could store 20 stills and transmit live “video” at a rate of 2 fps. Sharp soon followed with its J-SH04, developed with inventor Philippe Kahn, whose 1997 prototype phone was the first to transmit a photo—of his baby daughter.

1999 Nikon D1

The first DSLR body designed from scratch by a single manufacturer, the 2.7-megapixel D1 made the digital camera a serious challenger to professional film SLRs. It dropped the price of a digital SLR by more than half (it was originally sold at just under $5,000), and offered the image quality, build, and performance required by photojournalists.
It, and DSLRs from Fujifilm and Canon, also helped end the reign of Kodak in professional DSLRs.

2000 Olympus E-10

The first digital SLR to offer a live LCD view, the E-10 replaced the standard SLR mirror with a beam-splitter that channeled incoming light to both to optical viewfinder and the sensor.
The design allowed the image feed from the CCD to be displayed live on the LCD.

https://www.popphoto.com/gear/2013/10/30-most-important-digital-cameras#page-4

History of Photography-Digital Photography

2007 Apple iPhone

Manufacturers like Nokia and Sony Ericsson had long been producing camera phones with better optics and more features when the iPhone launched, but Apple made camera-phone imaging the mainstream medium it is today by combining a simple camera interface, intuitive downloading and sharing tools, and, in 2008, a highly accessible platform for third-party photo apps.

Nikon D850

Type: DSLR | **Sensor size:** Full-frame CMOS | **Resolution:** 45.4MP | **Lens:** Nikon F mount | **Viewfinder:** Optical | **Screen type:** 3.2-inch tilting touchscreen, 2,359,000 dots | **Maximum continuous shooting speed:** 7fps | **Movies:** 4K | **User level:** Intermediate/expert

https://www.popphoto.com/gear/2013/10/30-most-important-digital-cameras#page-4

Image Formation

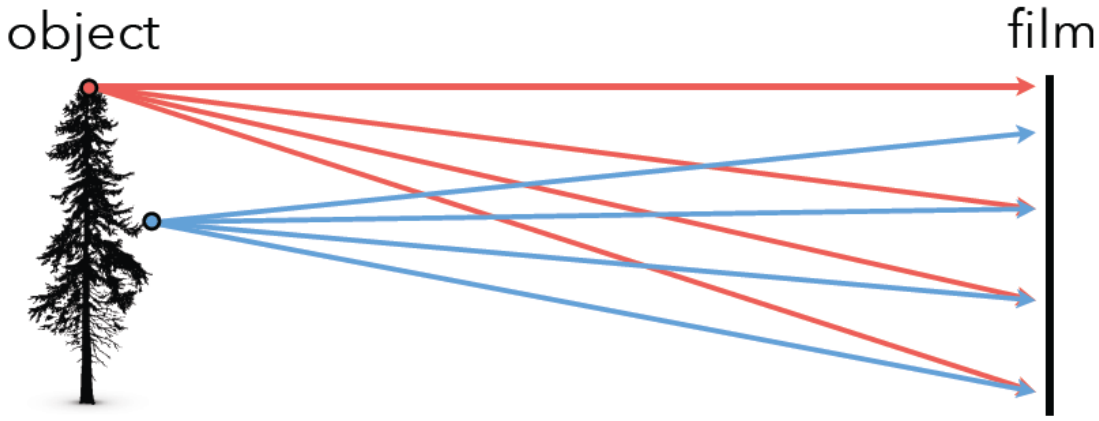

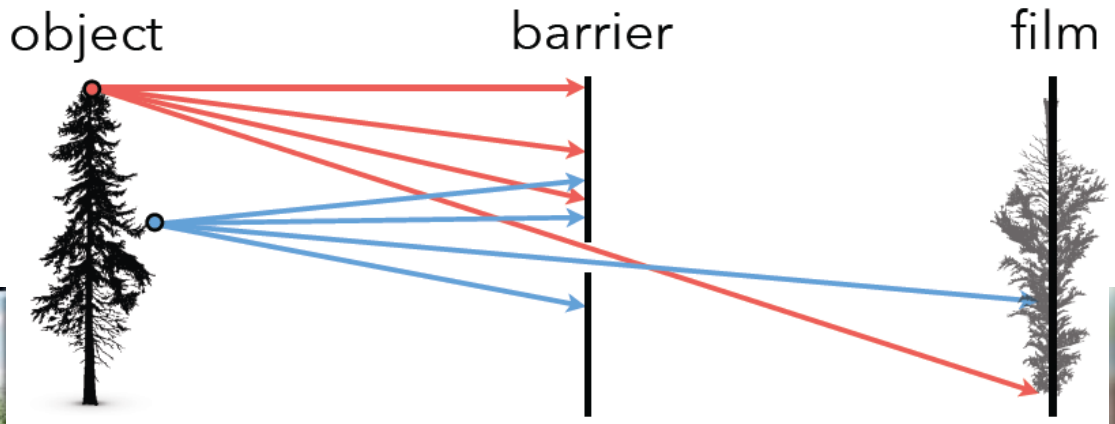

https://www.cs.dartmouth.edu/~wjarosz/courses/cs89-fa15/schedule.html

Shrinking the Aperture

E. Hecht, Optics, 4th Ed.,Pearson-Addison Wesley, 2002

Why not smaller and smaller aperture?

- Less light passes through
- Diffraction effects blur the image

Use of a Lens

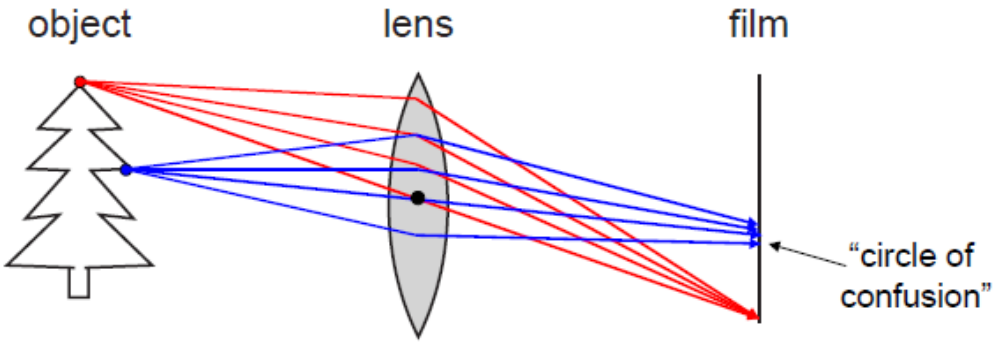

The lens focuses light on to the film or to the CCD/CMOS array

- There is a specific distance at which objects are "in focus"
- Other points project to a "circle of confusion (CoC)" in the image plane
- Circle of Confusion must be acceptable for not observable blurring

http://www.cs.unc.edu/~lazebnik/spring09/lec02_camera.ppt

f-Number or f/Stop

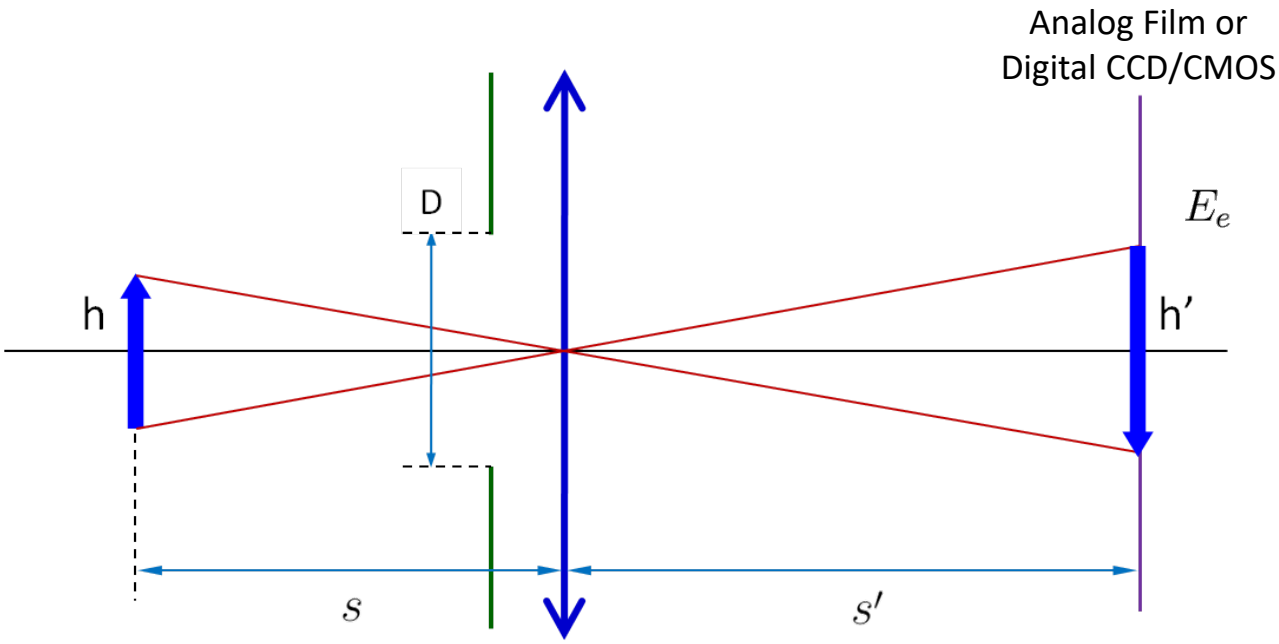

$$\frac{1}{s}+\frac{1}{s'} = \frac{1}{f} \quad \Longrightarrow \quad s' = \frac{sf}{s-f}$$

$$m = \frac{h'}{h} = -\frac{s'}{s} \quad \Longrightarrow \quad h' = -h\,\frac{f}{s-f}$$

$$E_e \sim \frac{k\pi(D^2/4)}{\pi(h'^2/4)} \sim \left(\frac{D}{h'}\right)^2 \sim \left(\frac{D}{f}\right)^2$$

$$A = \frac{f}{D} \qquad \text{(f-number)}$$

f-Number or f/Stop

$$\text{f-number} = f/\# = \frac{n}{2n' \sin\theta'} \simeq \frac{n}{2n' \tan\theta'} \simeq \frac{1}{2\tan\theta} = \frac{f}{D} \qquad \text{(in air)}$$

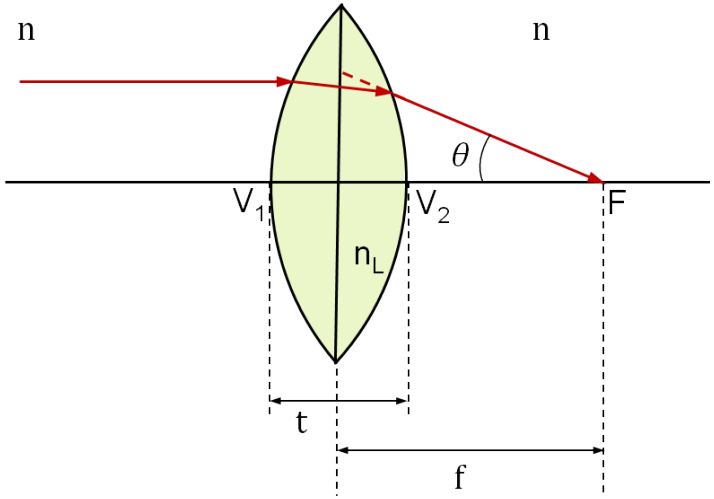

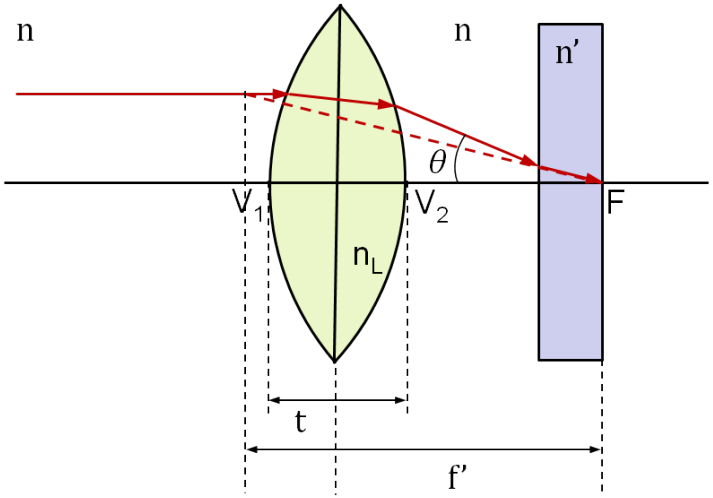

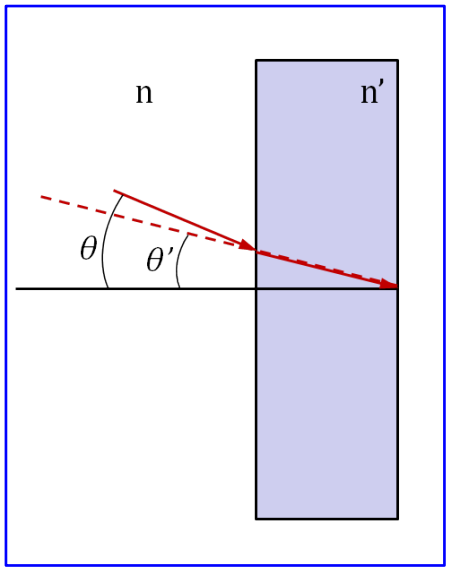

Zoomed near glass plate

f-Number or f/Stop

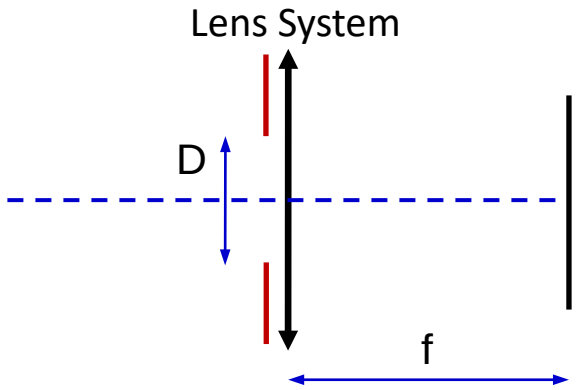

Analog Film or
Digital CCD/CMOS

$$E \propto \left(\frac{D}{f}\right)^2$$

f-number = f/D = A	A^2	Irradiance = E = k/A^2
1	1	E_0
1.4	2	$E_0/2$
2	4	$E_0/4$
2.8	8	$E_0/8$
4	16	$E_0/16$
5.6	32	$E_0/32$
8	64	$E_0/64$
11	128	$E_0/128$
16	256	$E_0/256$
22	512	$E_0/512$
32	1024	$E_0/1024$

Exposure (J/m^2) = Irradiance (W/m^2) × Time (sec)

f-Number or f/Stop

Exposure (J/m^2) = Irradiance (W/m^2) × Time (sec)

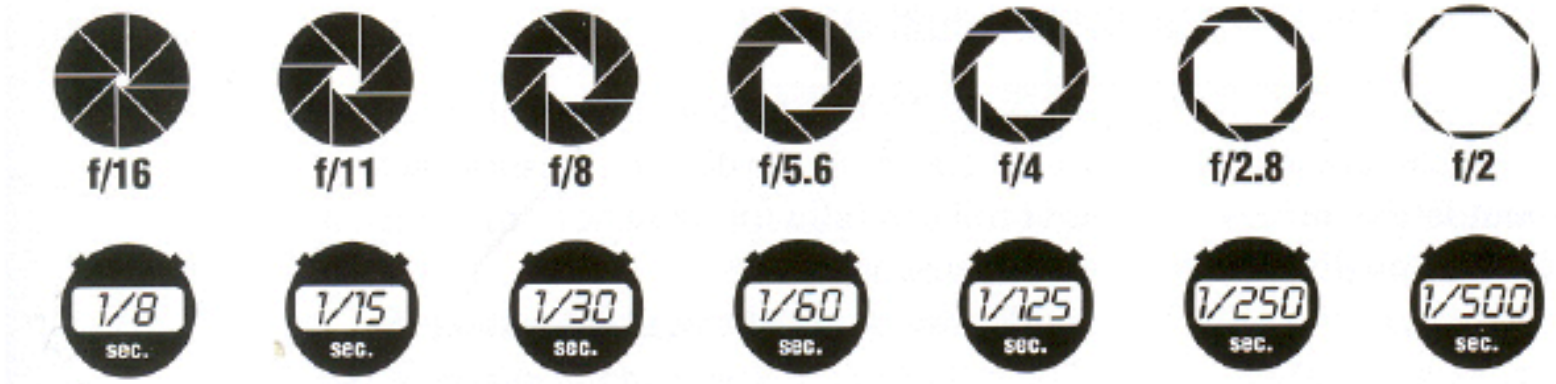

$E = E_0/256 \times 1/8 \approx E_0/128 \times 1/15 \approx E_0/64 \times 1/30 \approx E_0/32 \times 1/60 \approx E_0/16 \times 1/125 \approx E_0/8 \times 1/250 \approx E_0/4 \times 1/500$

https://www.cs.dartmouth.edu/~wjarosz/courses/cs89-fa15/schedule.html

The Inside of a Camera

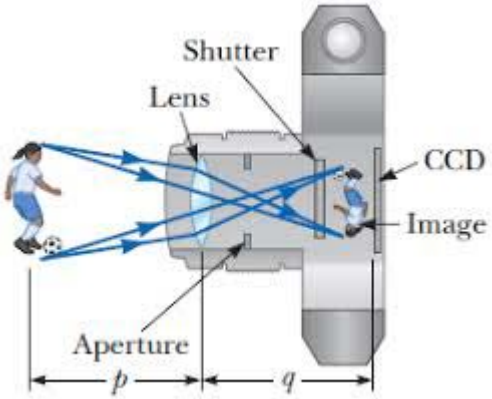

https://encrypted-tbn0.gstatic.com/images?q=tbn:ANd9GcTKvHTJ8oocelmO6_U1NM1elrHYKkKwViaUbbrF_ArV72LILmukWA

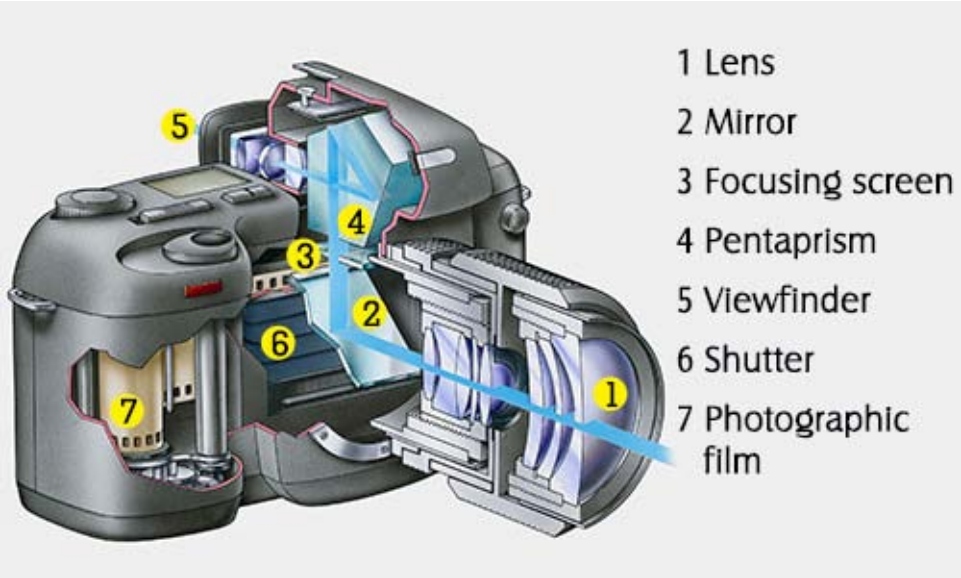

https://www.buzzle.com/images/photography/slr-labelled.jpg

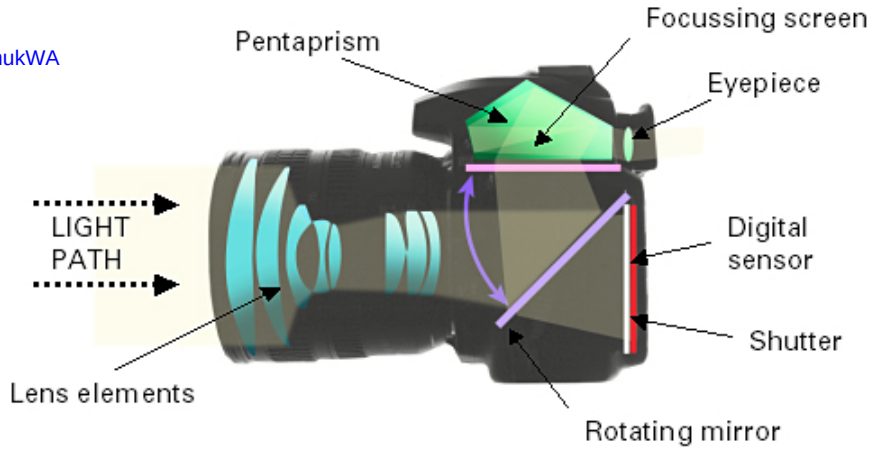

https://puserscontentstorage.blob.core.windows.net/userimages/2d09794c-17e8-4963-bf40-144ba595d48c/154d47bd-4fc9-495e-a0eb-793691378803image1.jpeg

Depth of Field and Depth of Focus
Circle of Confusion (CoC)

In photography, the circle of confusion (CoC) diameter limit for the final image is often defined as the largest blur spot that will still be perceived by the human eye as a point.

Usually CoC = d/1500 (or d/1730) (d= diagonal of film or detector)

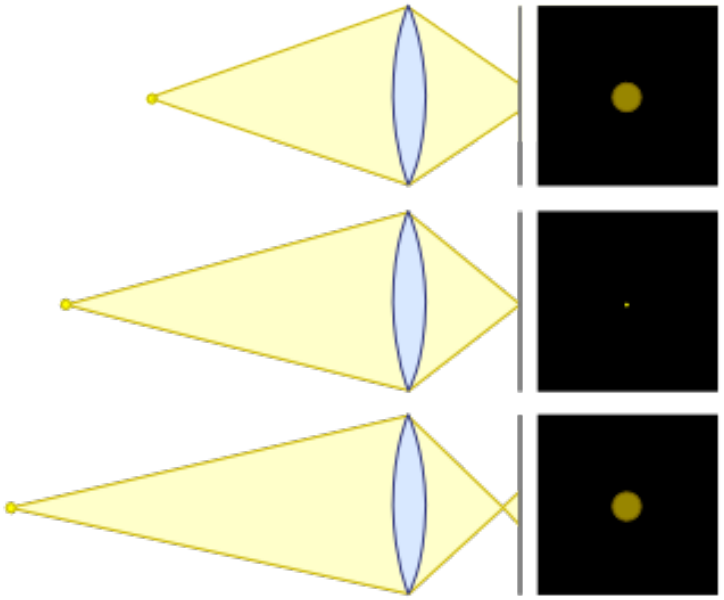

Image Format	Frame size	CoC
Small Format		
Nikon 1 series	8.8 mm × 13.2 mm	0.011 mm
Four Thirds System	13.5 mm × 18 mm	0.015 mm
APS-C	15.0 mm × 22.5 mm	0.018 mm
APS-C Canon	14.8 mm × 22.2 mm	0.018 mm
APS-C Nikon/Pentax/Sony	15.7 mm × 23.6 mm	0.019 mm
APS-H Canon	19.0 mm × 28.7 mm	0.023 mm
35 mm	24 mm × 36 mm	0.029 mm
Medium Format		
645 (6×4.5)	56 mm × 42 mm	0.047 mm
6×6	56 mm × 56 mm	0.053 mm
6×7	56 mm × 69 mm	0.059 mm
6×9	56 mm × 84 mm	0.067 mm
6×12	56 mm × 112 mm	0.083 mm
6×17	56 mm × 168 mm	0.12 mm
Large Format		
4×5	102 mm × 127 mm	0.11 mm
5×7	127 mm × 178 mm	0.15 mm
8×10	203 mm × 254 mm	0.22 mm

CoC in mm = (viewing distance cm / 25 cm) / (desired final-image resolution in lp/mm for a 25 cm viewing distance) / enlargement

https://en.wikipedia.org/wiki/Circle_of_confusion

Depth of Field and Depth of Focus

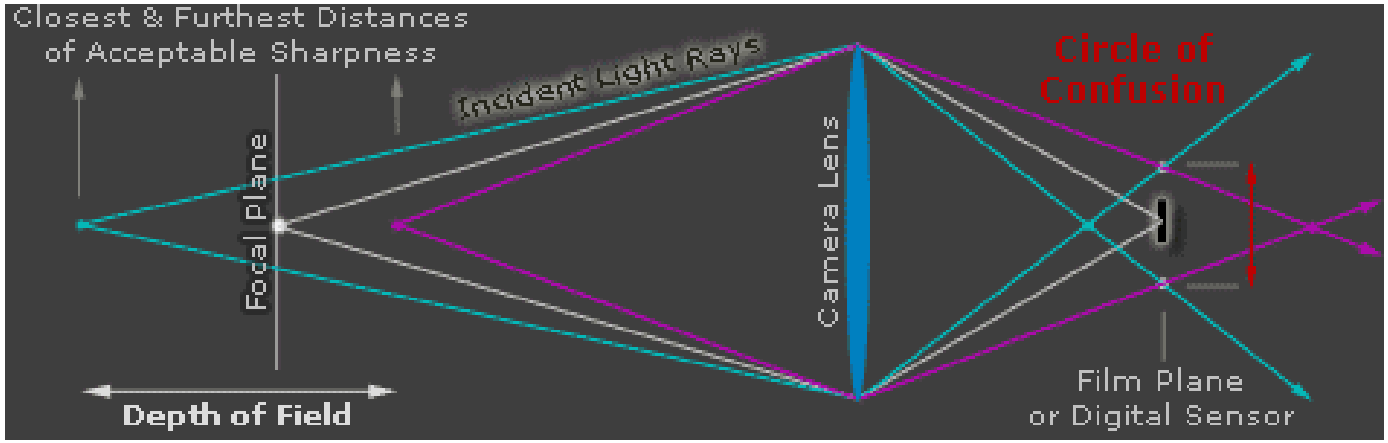

http://www.cambridgeincolour.com/tutorials/depth-of-field.htm

Depth of Field and Depth of Focus

- Range of object distances over which image is sufficiently well focused.
- Range for which *blur circle* is less than the resolution of the sensor.

http://blog.epicedits.com/2007/02/27/6-tips-for-controlling-depth-of-field/

Depth of Field and Depth of Focus

http://www.cambridgeincolour.com/tutorials/depth-of-field.htm

Depth of Field Depends on Aperture

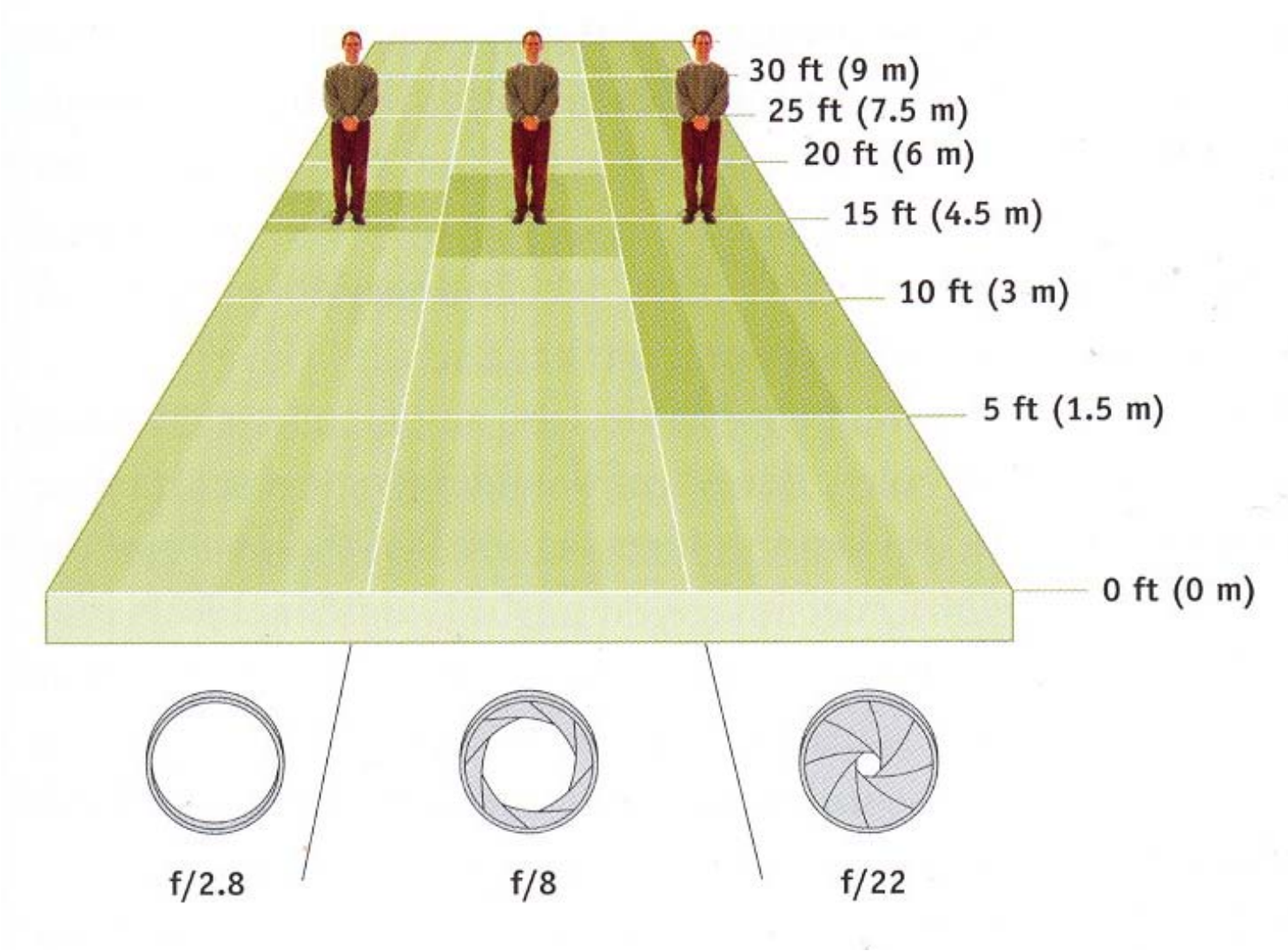

Depth of Field Depends on Focusing Distance

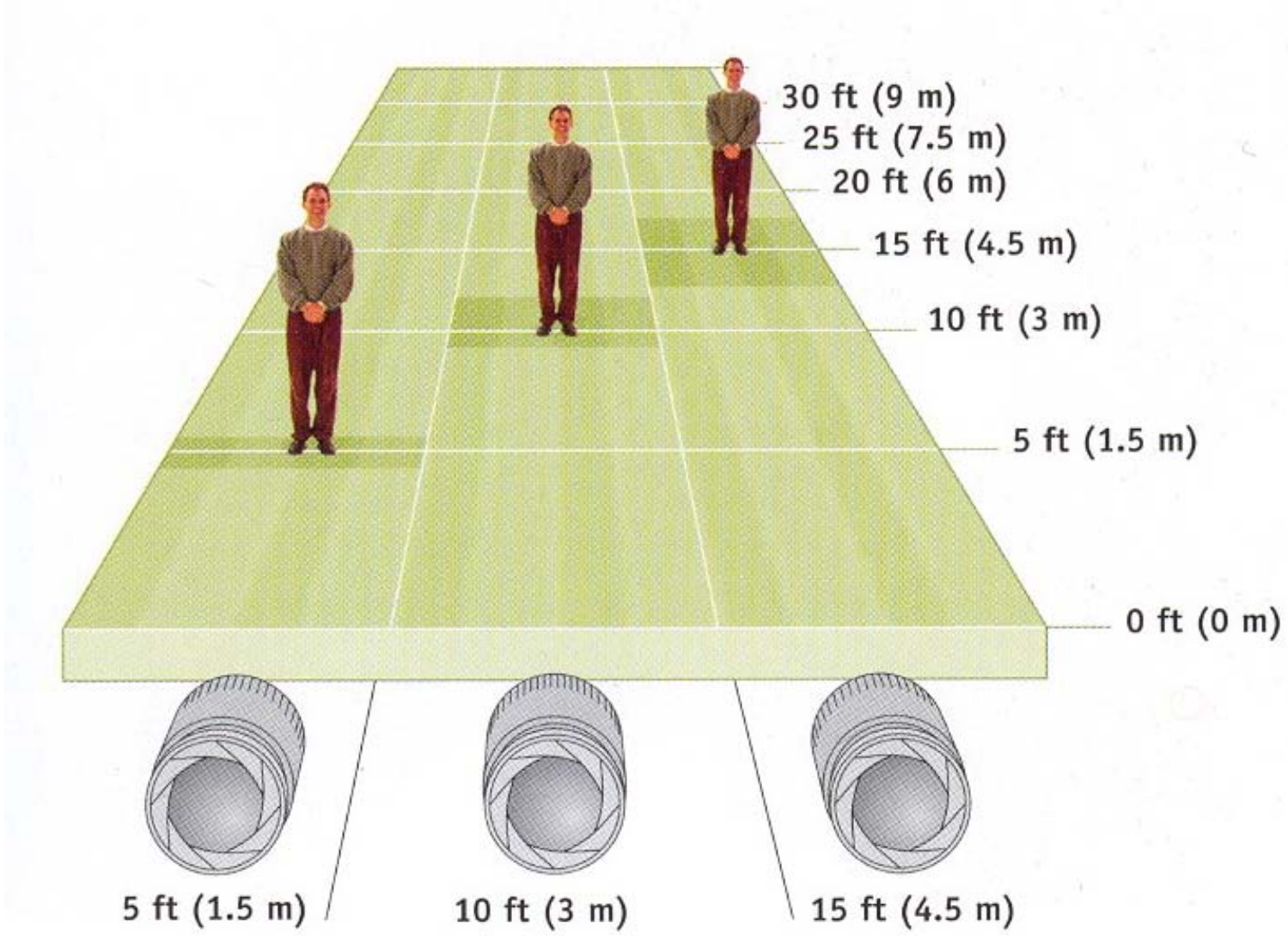

Depth of Field Depends on Focal Length

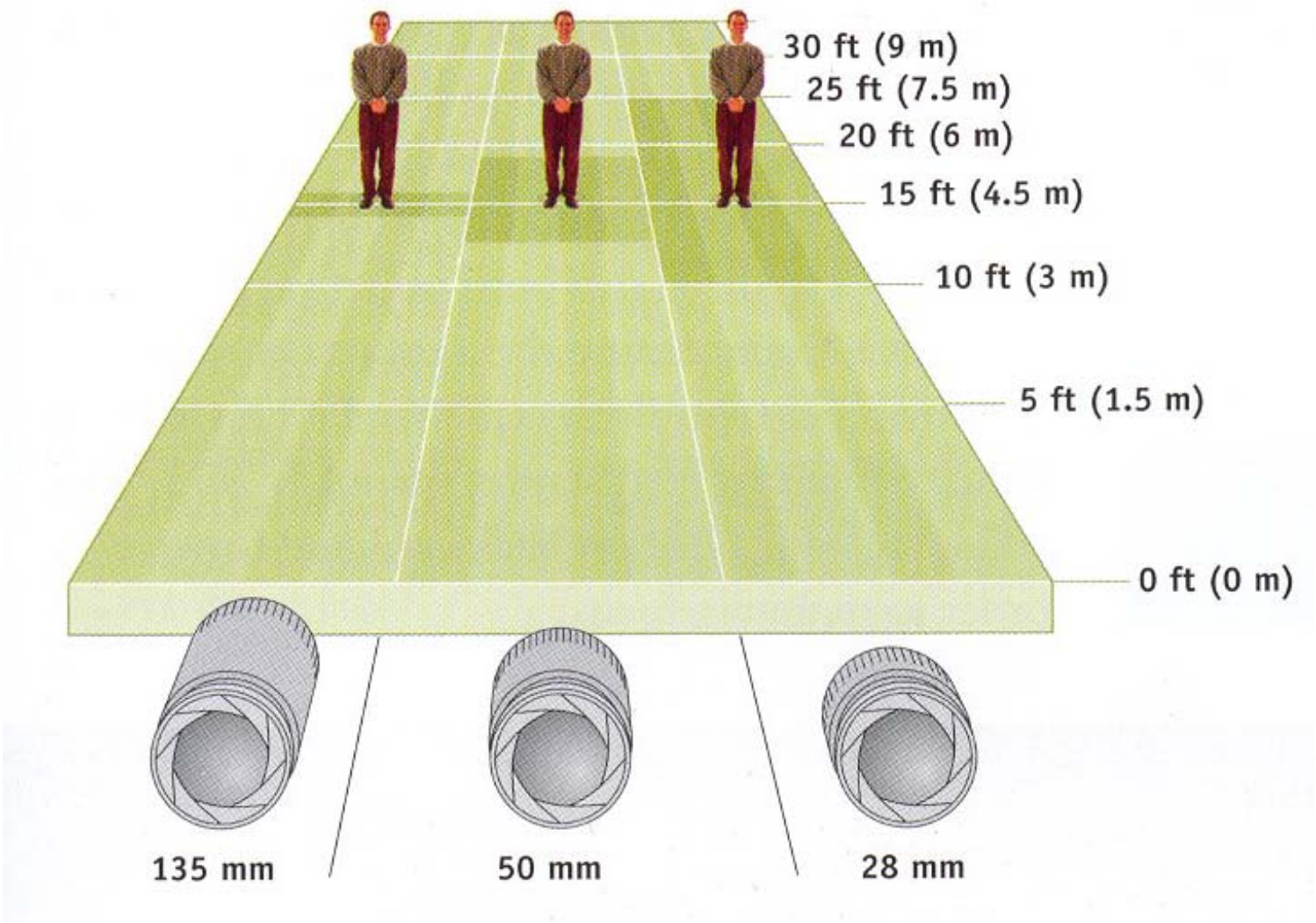

Controlling Depth of Field

f/8.0

f/5.6

f/2.8

http://www.cambridgeincolour.com/tutorials/depth-of-field.htm

Depth of Field

In focus

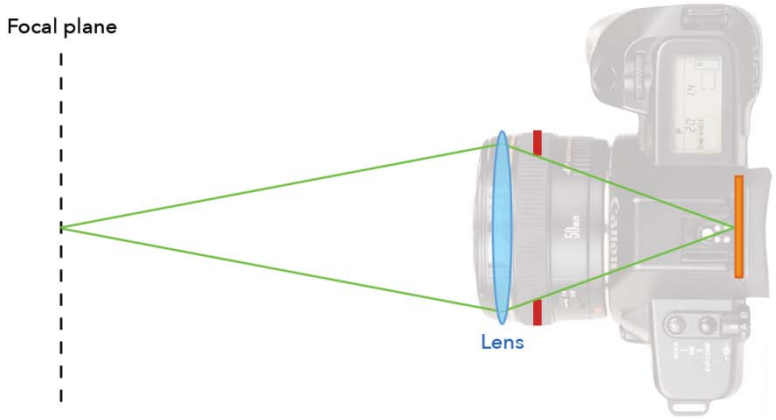

Out of focus (blurring)

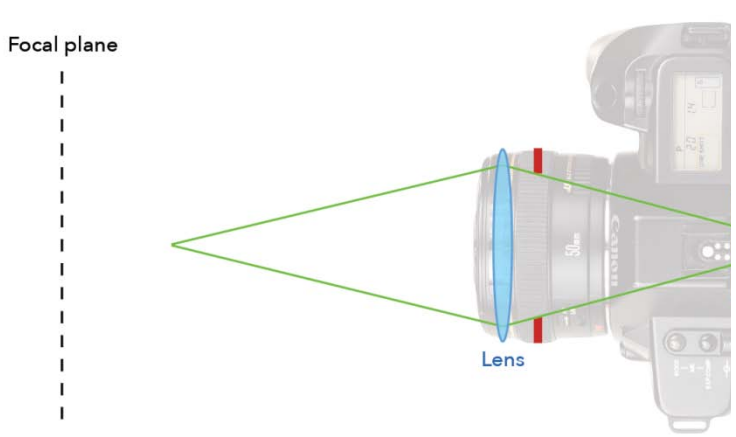

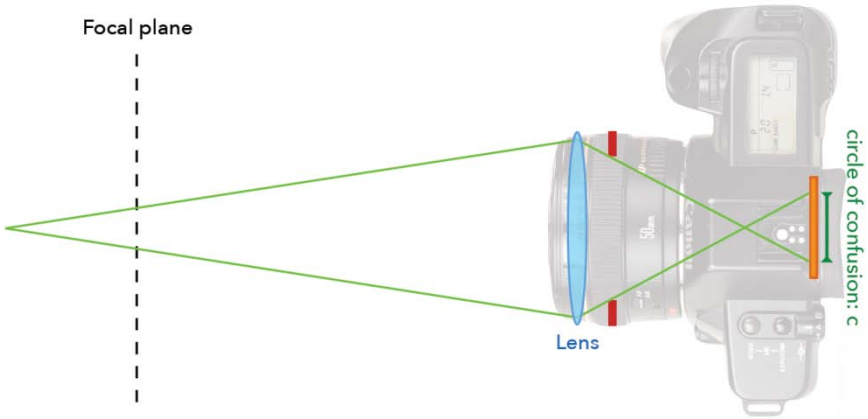

https://www.cs.dartmouth.edu/~wjarosz/courses/cs89-fa15/schedule.html

Depth of Field

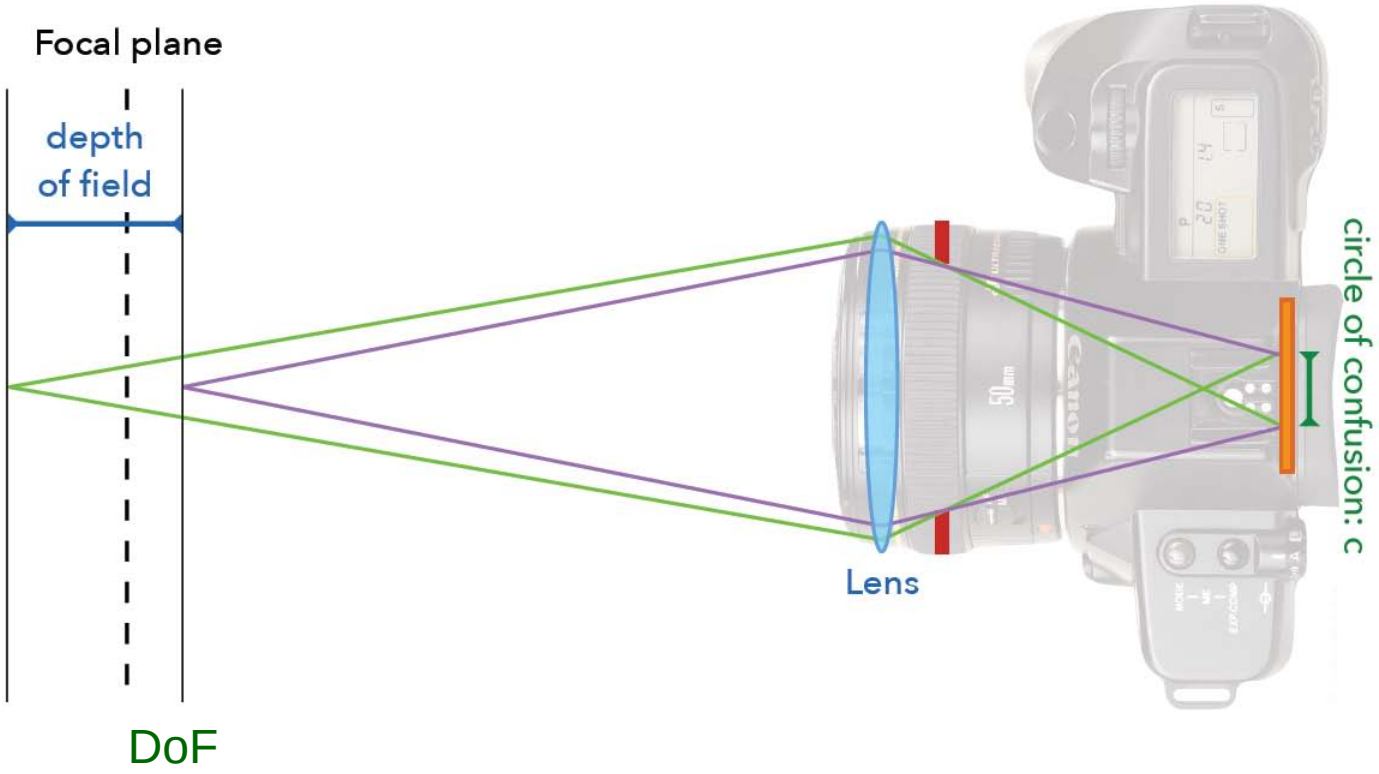

https://www.cs.dartmouth.edu/~wjarosz/courses/cs89-fa15/schedule.html

Depth of Field and Depth of Focus

From Similar Triangles

$$\frac{c}{D} = \frac{s' - z'_f}{z'_f} \Longrightarrow \frac{1}{z'_f} = \frac{1}{s'}\left(1 + \frac{c}{D}\right)$$

$$\frac{c}{D} = \frac{z'_n - s'}{z'_n} \Longrightarrow \frac{1}{z'_n} = \frac{1}{s'}\left(1 - \frac{c}{D}\right)$$

$$\frac{1}{z'_f} + \frac{1}{z'_n} = \frac{2}{s'}$$

$$\frac{1}{z'_f} - \frac{1}{z'_n} = 2\frac{c}{D}\frac{1}{s'}$$

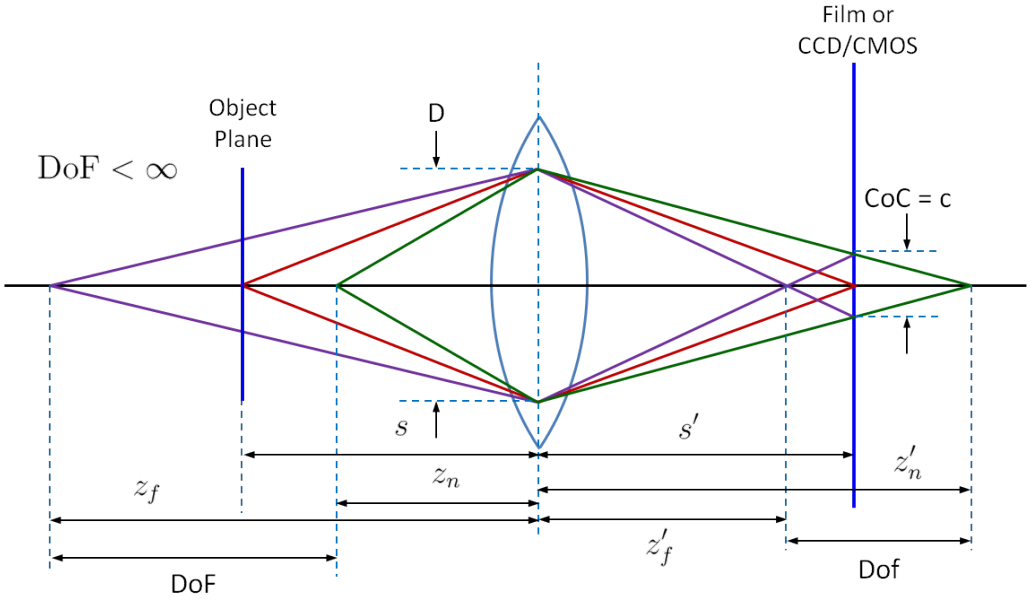

$$\frac{1}{s} + \frac{1}{s'} = \frac{1}{f}$$

$$\frac{1}{z_f} + \frac{1}{z'_f} = \frac{1}{f} \Longrightarrow \frac{1}{z_f} = \frac{1}{f} - \frac{1}{s'}\left(1 + \frac{c}{D}\right)$$

$$\frac{1}{z_n} + \frac{1}{z'_n} = \frac{1}{f} \Longrightarrow \frac{1}{z_n} = \frac{1}{f} - \frac{1}{s'}\left(1 - \frac{c}{D}\right)$$

$$\frac{1}{z_n} + \frac{1}{z_f} = \frac{2}{s}$$

$$\frac{1}{z_n} - \frac{1}{z_f} = 2\frac{c}{D}\left(\frac{1}{f} - \frac{1}{s}\right)$$

$$\text{Depth of Focus} = z'_n - z'_f$$

$$\text{Depth of Field} = z_f - z_n$$

Depth of Field and Depth of Focus

$$\frac{1}{z_n} = \frac{1}{s} + \frac{c}{D}\left(\frac{1}{f} - \frac{1}{s}\right)$$
$$\frac{1}{z_f} = \frac{1}{s} - \frac{c}{D}\left(\frac{1}{f} - \frac{1}{s}\right)$$

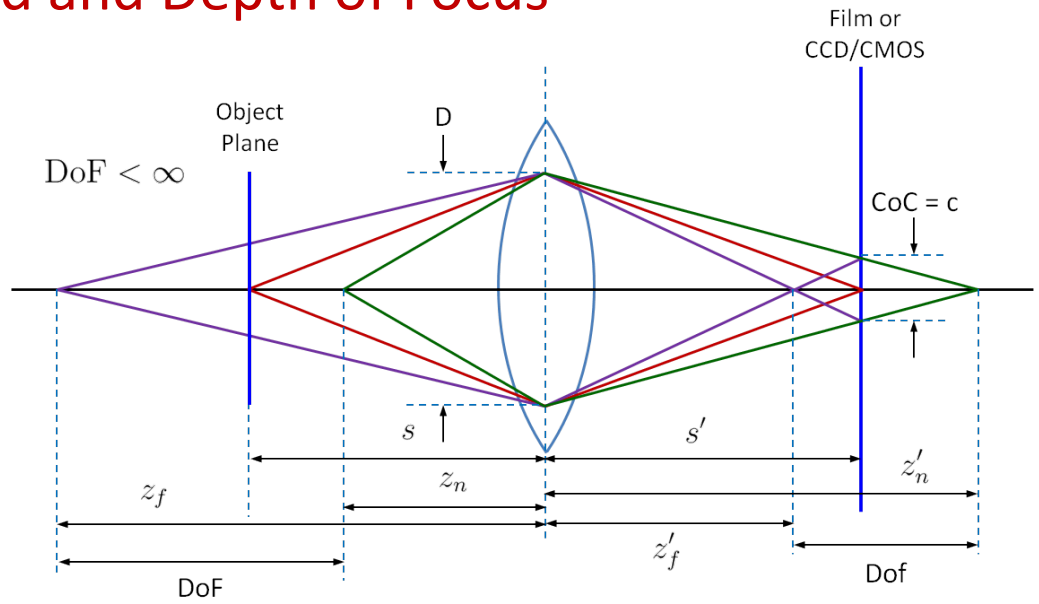

Hyperfocal Lengths, H (exact) and H' (approximate)

$$H = H'\left(1 + \frac{c}{D}\right) = f + \frac{f^2}{c}\frac{1}{(f/D)}$$

$$H' = \frac{f^2}{c}\frac{1}{(f/D)}$$

$$\frac{1}{z_f} = \frac{1}{s}\left(1 + \frac{c}{D}\right) - \frac{1}{H'}$$
$$\frac{1}{z_n} = \frac{1}{s}\left(1 - \frac{c}{D}\right) + \frac{1}{H'}$$

Depth of Field

$$\mathrm{DoF} = z_f - z_n = \frac{2\frac{c}{D}\frac{s}{f}(s-f)}{1 - \left(\frac{c}{D}\right)^2\left(\frac{s-f}{f}\right)^2}$$

Depth of Field and Depth of Focus

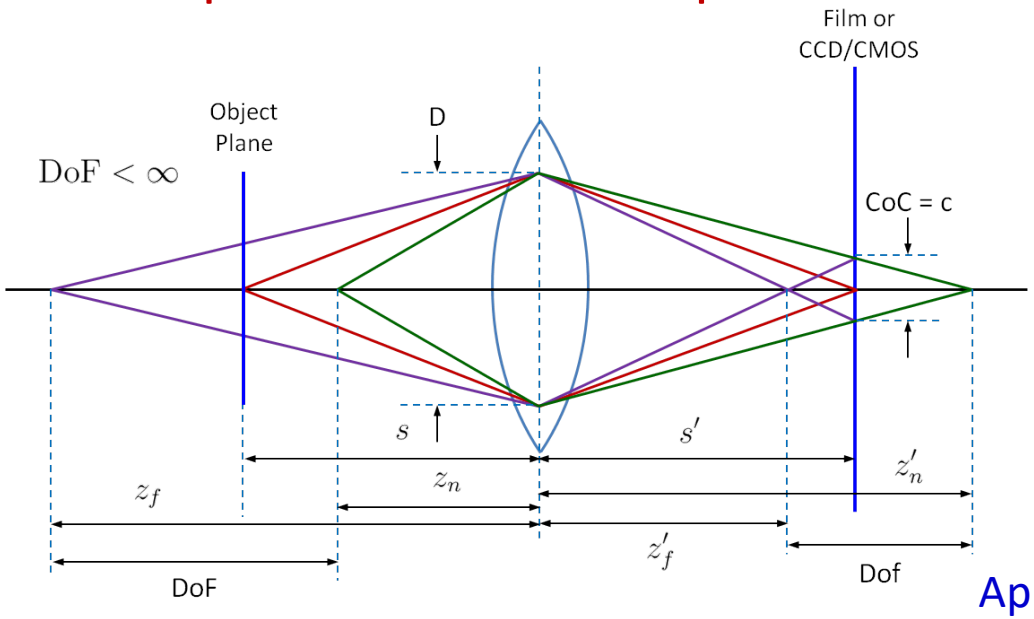

$$\frac{1}{z_n} = \frac{1}{s} + \frac{c}{D}\left(\frac{1}{f} - \frac{1}{s}\right) \simeq \frac{1}{s} + \frac{c}{D}\frac{1}{f} = \frac{1}{s} + \frac{c}{f^2}\frac{f}{D}$$

$$\frac{1}{z_f} = \frac{1}{s} - \frac{c}{D}\left(\frac{1}{f} - \frac{1}{s}\right) \simeq \frac{1}{s} - \frac{c}{D}\frac{1}{f} = \frac{1}{s} - \frac{c}{f^2}\frac{f}{D}$$

Approximate *Hyperfocal* Length, H'

$$H' = \frac{f^2}{c}\frac{1}{(f/D)}$$

$$\frac{1}{z_f} \simeq \frac{1}{s} - \frac{1}{H'}$$

$$\frac{1}{z_n} \simeq \frac{1}{s} + \frac{1}{H'}$$

Depth of Field [for s>>f (practical case)]

$$\mathrm{DoF}_a = z_f - z_n = \frac{2\frac{c}{D}\frac{s^2}{f}}{1 - \left(\frac{c}{D}\right)^2\left(\frac{s}{f}\right)^2}$$

Depth of Field and Depth of Focus

$\mathrm{DoF} < \infty$

$f < s < H$

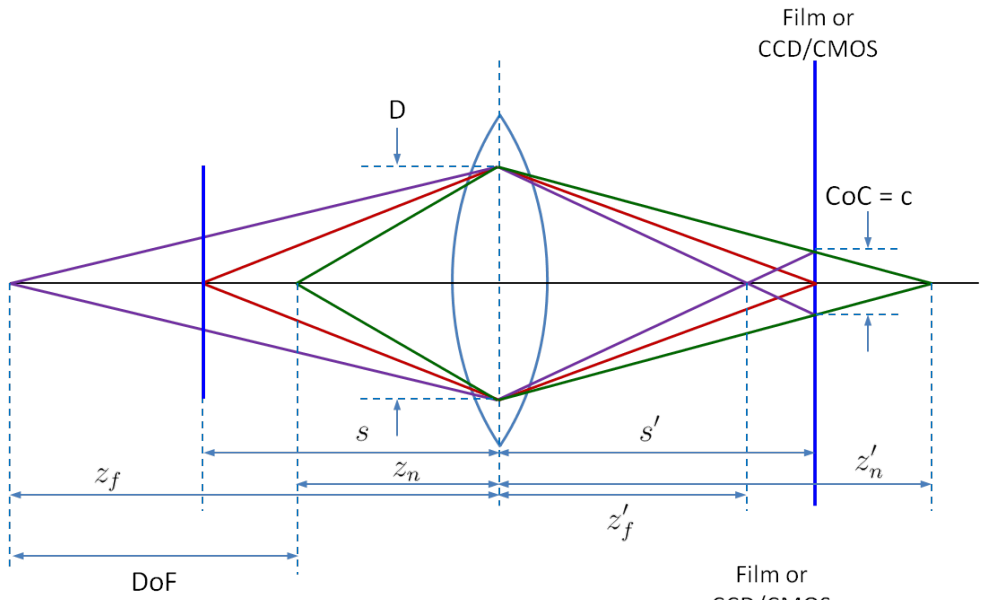

$\mathrm{DoF} = \infty$

$s = H$

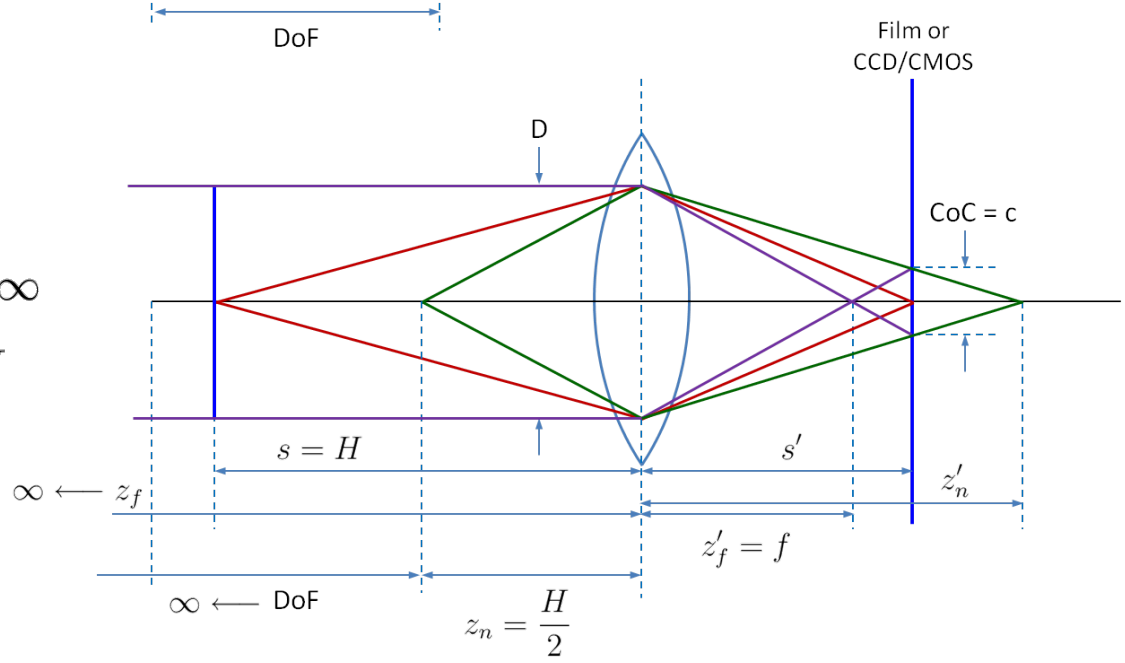

Depth of Field and Depth of Focus

$\mathrm{DoF} = \infty$

$s = H$

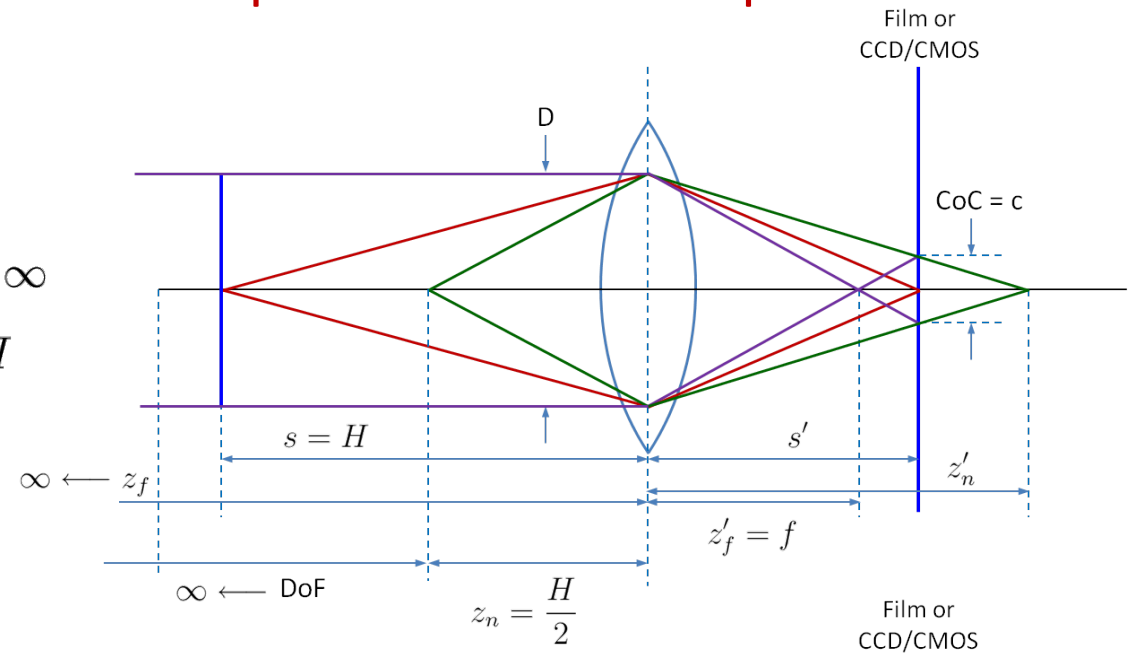

$\mathrm{DoF} = \infty$

$s > H$

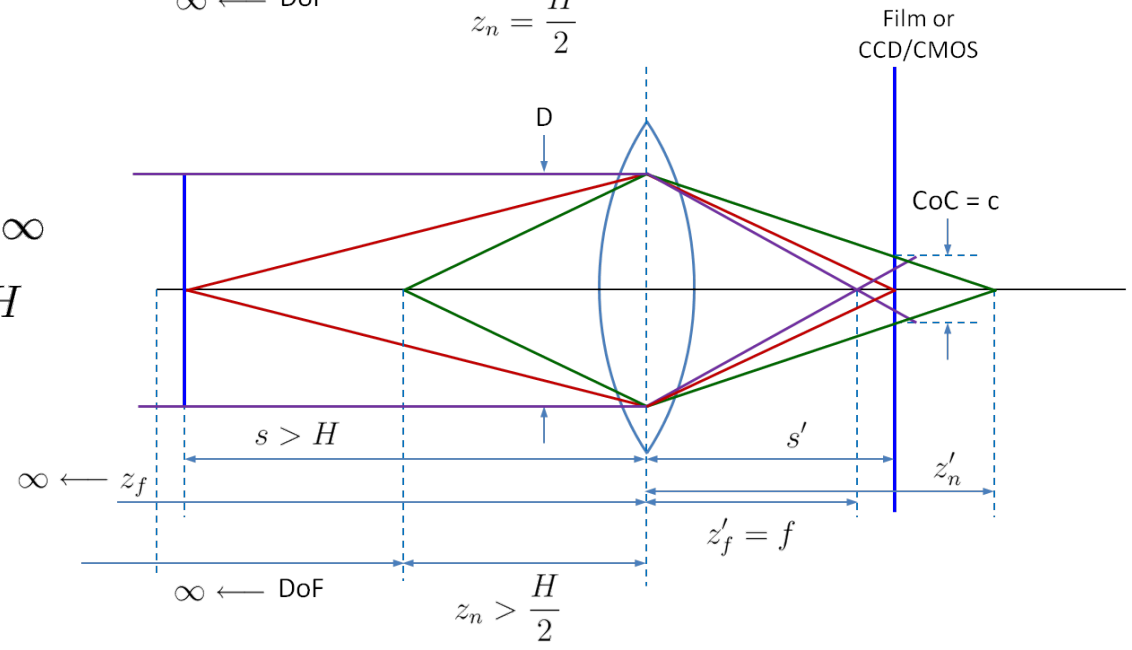

Hyperfocal Distance

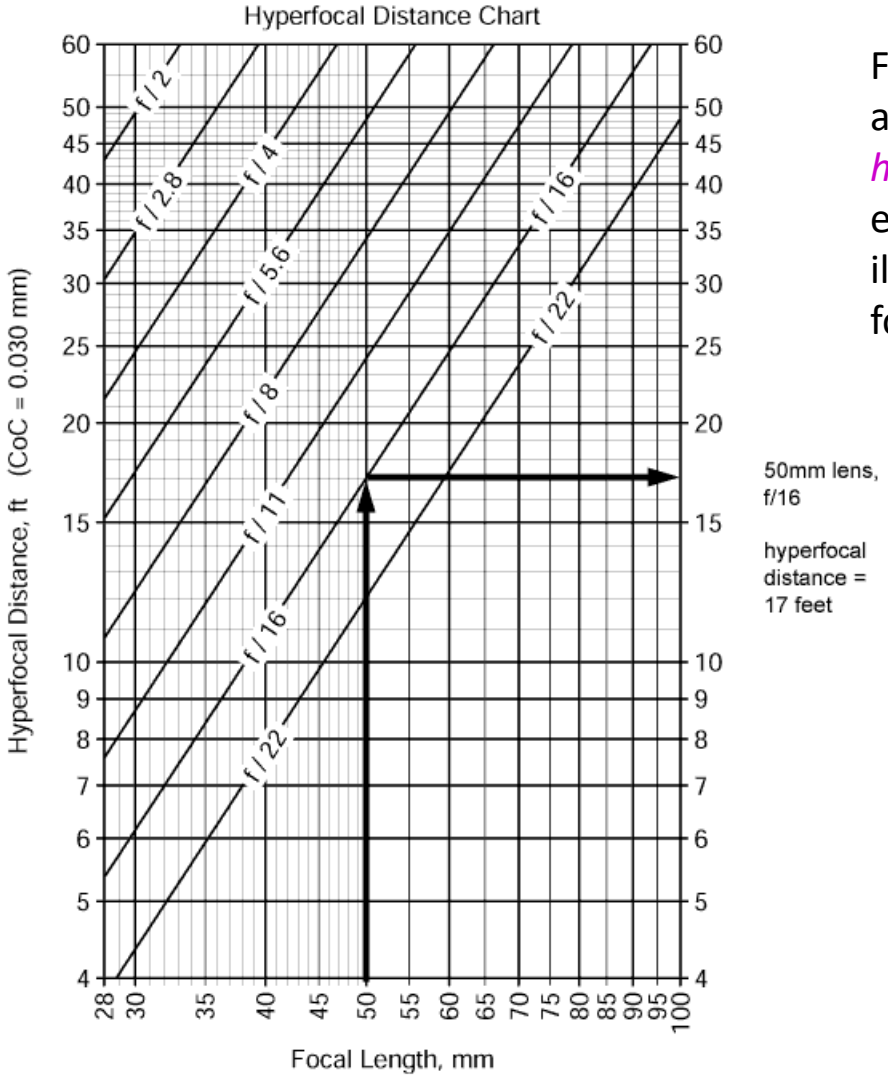

http://www.dofmaster.com/charts.html

Find the lens' focal length on the horizontal axis. Read up to the f-number to find the *hyperfocal* distance at that f-number. For example, the arrows on the chart above illustrate how to read the hyperfocal distance for a 50mm lens set to f/16.

Depth of Field - Near and Far Distances

$$H' = \frac{f^2}{c}\frac{1}{(f/D)}$$

$$H = f + \frac{f^2}{c}\frac{1}{(f/D)}$$

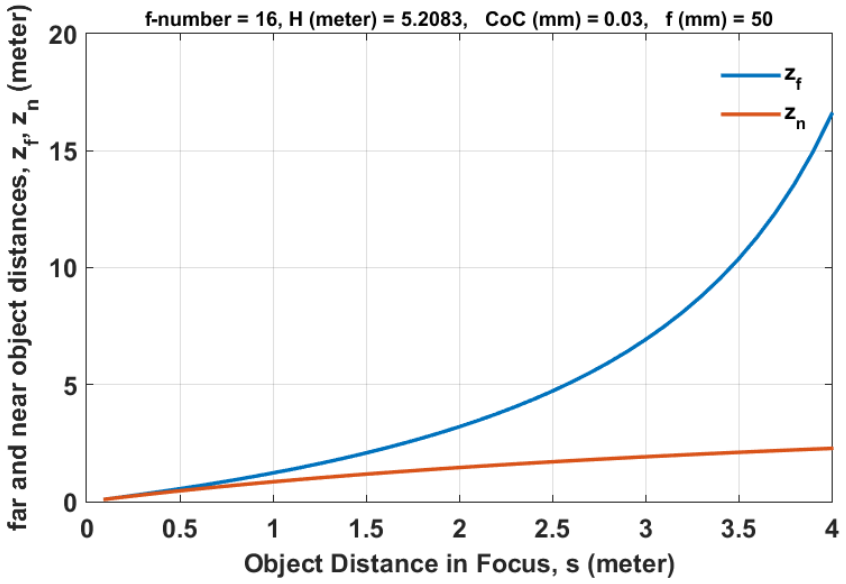

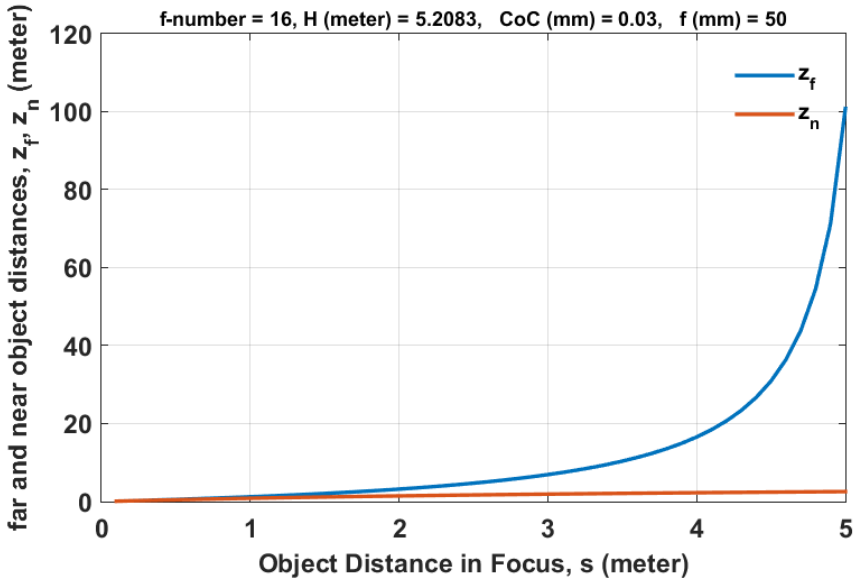

Depth of Field

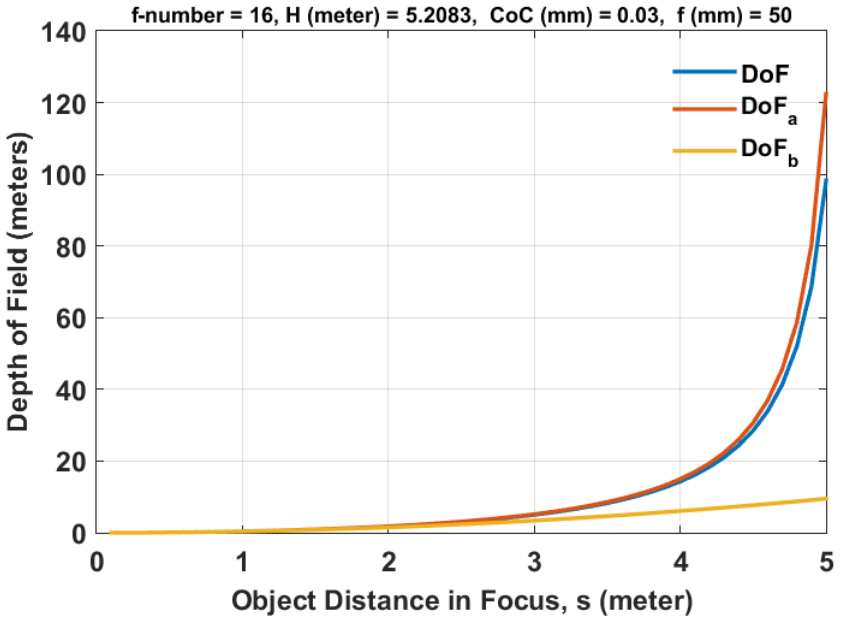

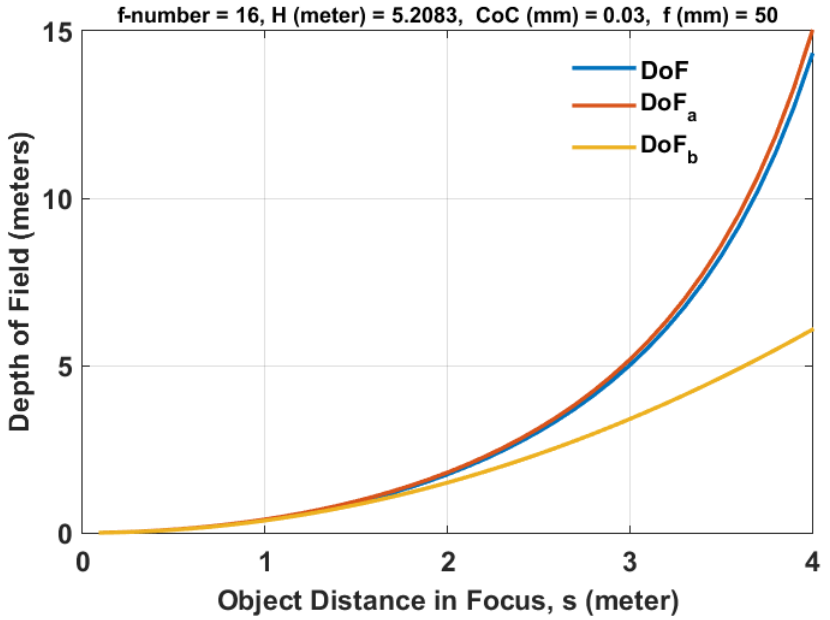

$$\frac{1}{z_f} = \frac{1}{s}\left(1+\frac{c}{D}\right) - \frac{1}{H'} \qquad \frac{1}{z_f} \simeq \frac{1}{s} - \frac{1}{H'}$$

$$\frac{1}{z_n} = \frac{1}{s}\left(1-\frac{c}{D}\right) + \frac{1}{H'} \qquad \frac{1}{z_n} \simeq \frac{1}{s} + \frac{1}{H'}$$

$$H' = \frac{f^2}{c}\frac{1}{(f/D)}$$

$$H = f + \frac{f^2}{c}\frac{1}{(f/D)}$$

$$\mathrm{DoF} = z_f - z_n \qquad \mathrm{DoF}_a = z_f - z_n \qquad \mathrm{DoF}_b = 2\,\frac{1-m}{m^2}\,\frac{f}{D}c = 2\,\frac{s(s-f)}{f^2}\,\frac{f}{D}c$$

Depth of Field Depends on Aperture

$$\mathrm{DoF} = \frac{2c\left(\frac{f}{D}\right)s(s-f)f^2}{f^4 - c^2\left(\frac{f}{D}\right)^2(s-f)^2}$$

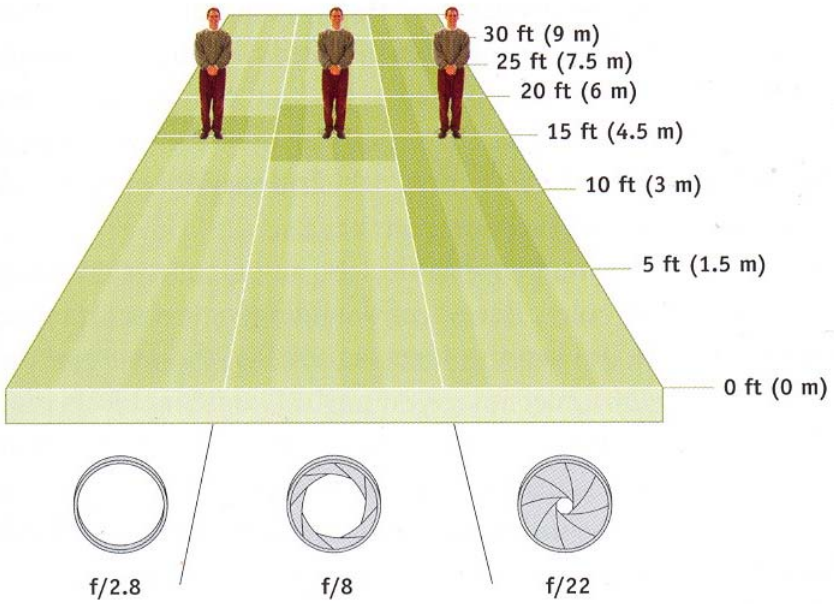

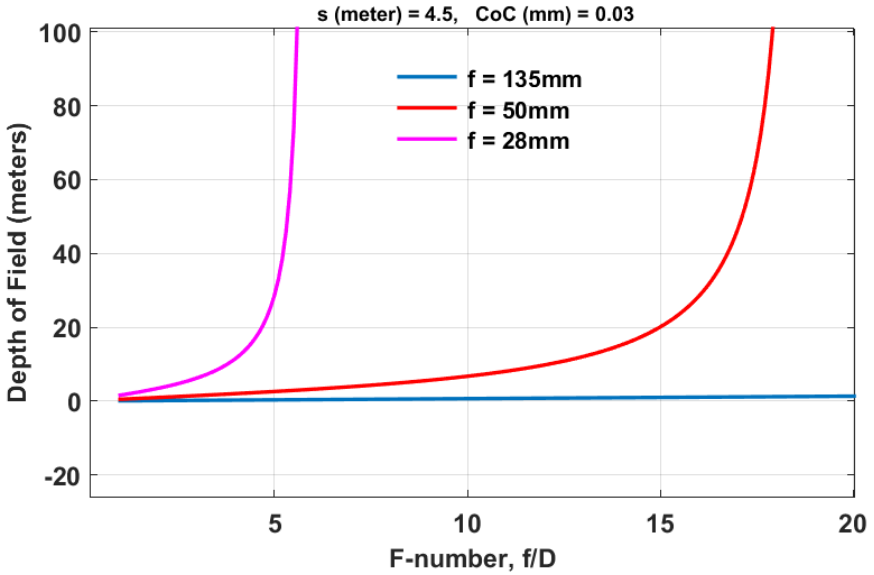

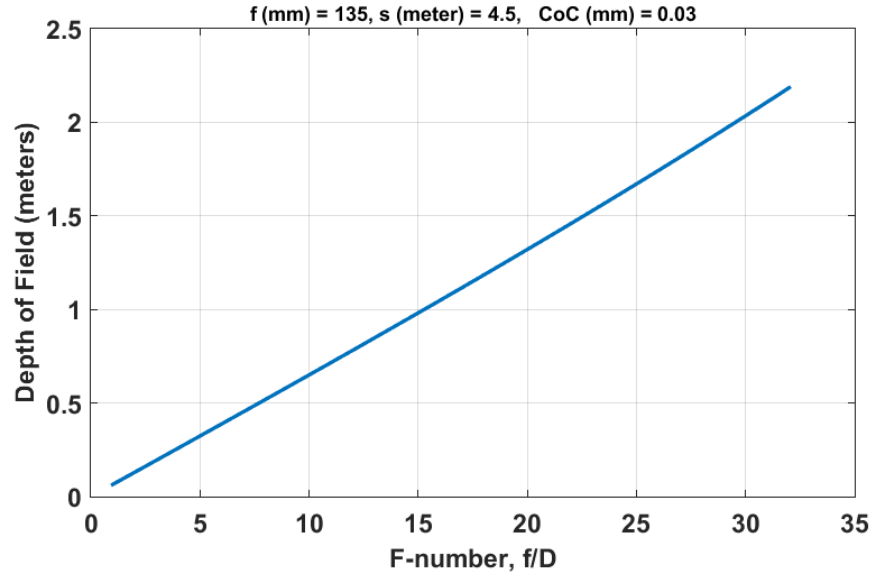

Depth of Field Depends on Focusing Distance

$$\mathrm{DoF} = \frac{2c\left(\frac{f}{D}\right)s(s-f)f^2}{f^4 - c^2\left(\frac{f}{D}\right)^2(s-f)^2}$$

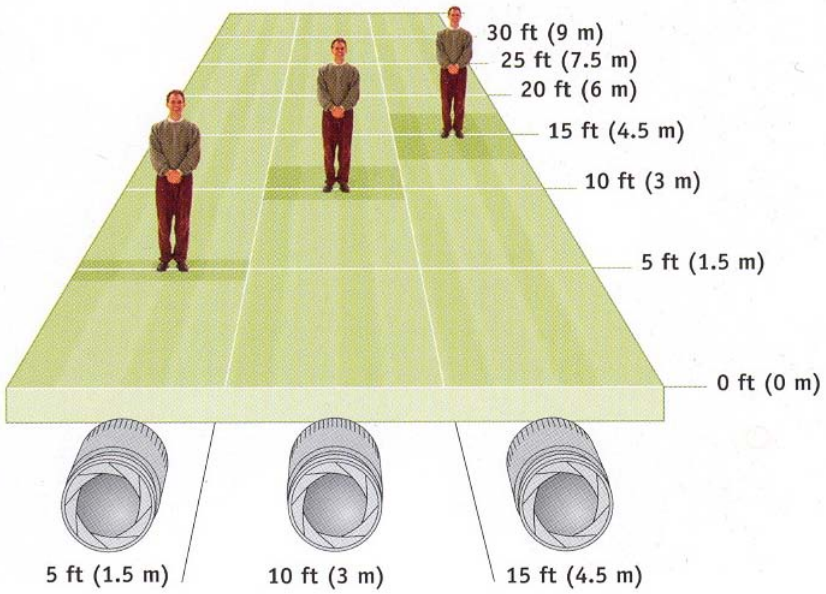

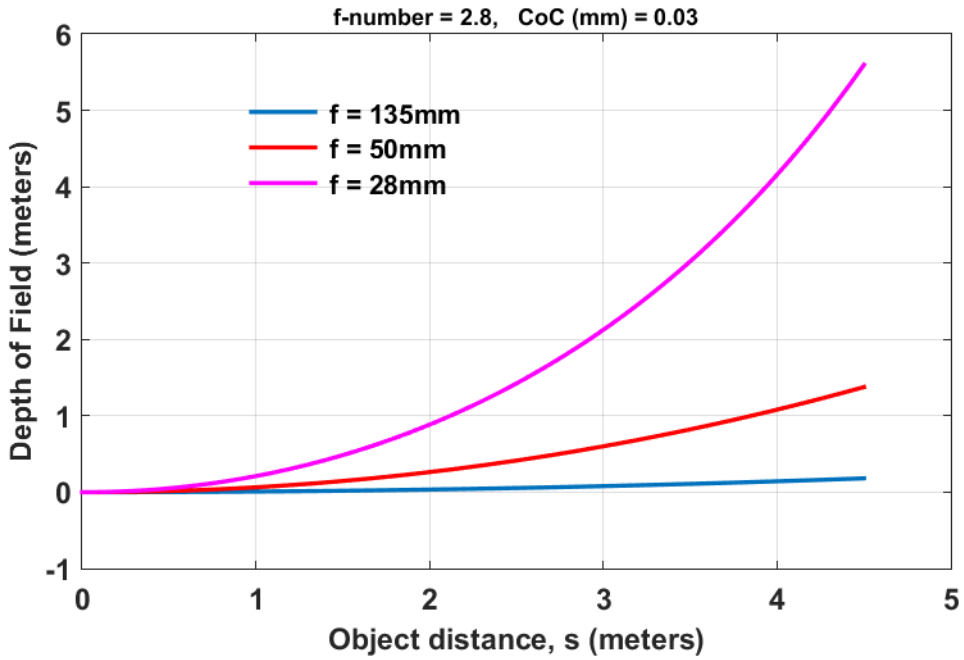

Depth of Field Depends on Focal Length

$$\mathrm{DoF} = \frac{2c\left(\frac{f}{D}\right)s(s-f)f^2}{f^4 - c^2\left(\frac{f}{D}\right)^2(s-f)^2}$$

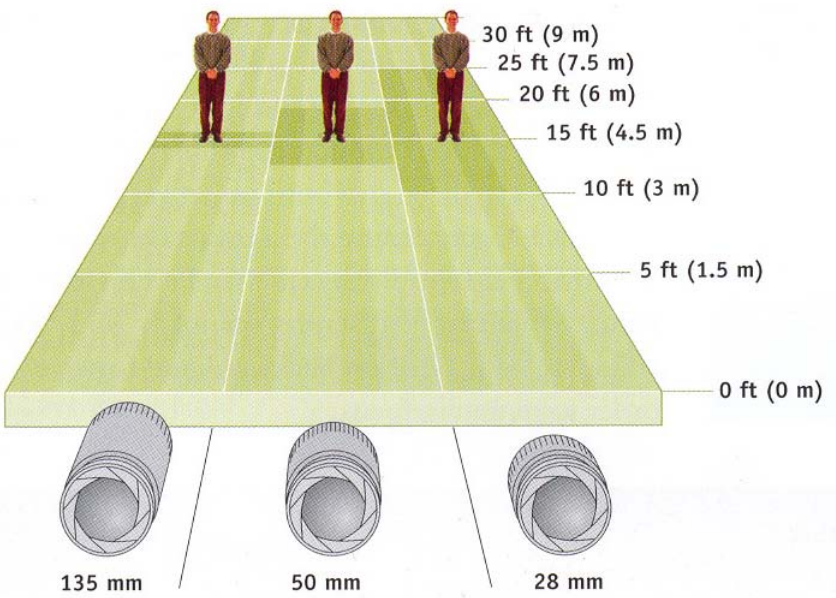

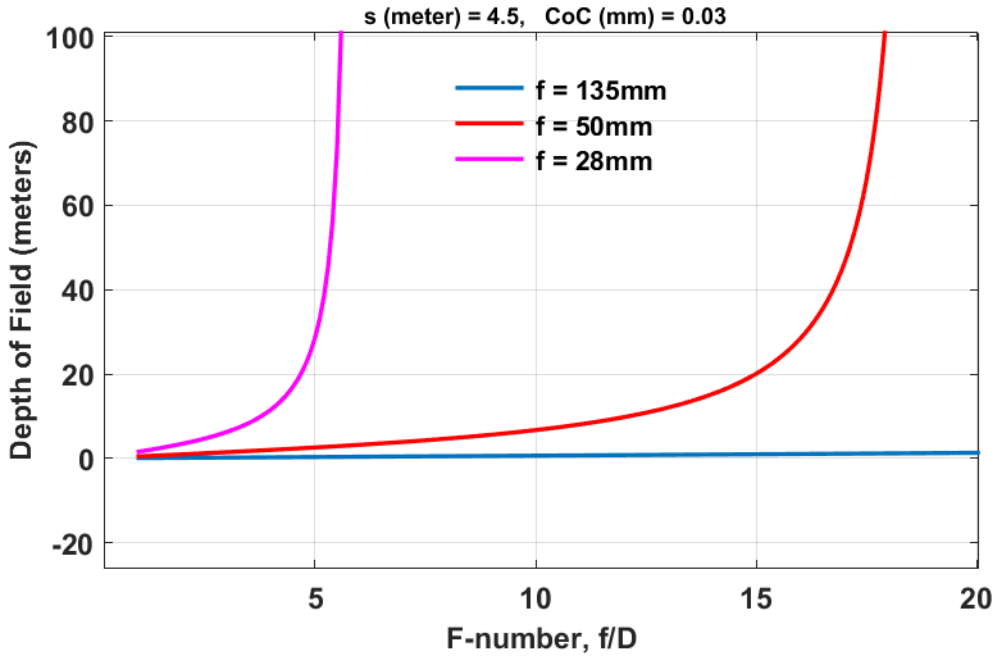

Field of View

CCD/CMOS Sensor Arrays Sizes in Digital Cameras

Images of a CCD/CMOS Arrays

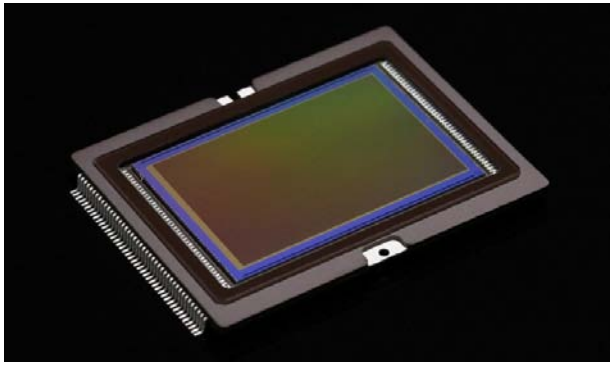

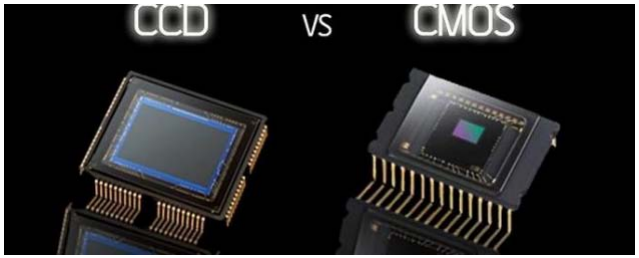

Standard CCD/CMOS Array Sizes

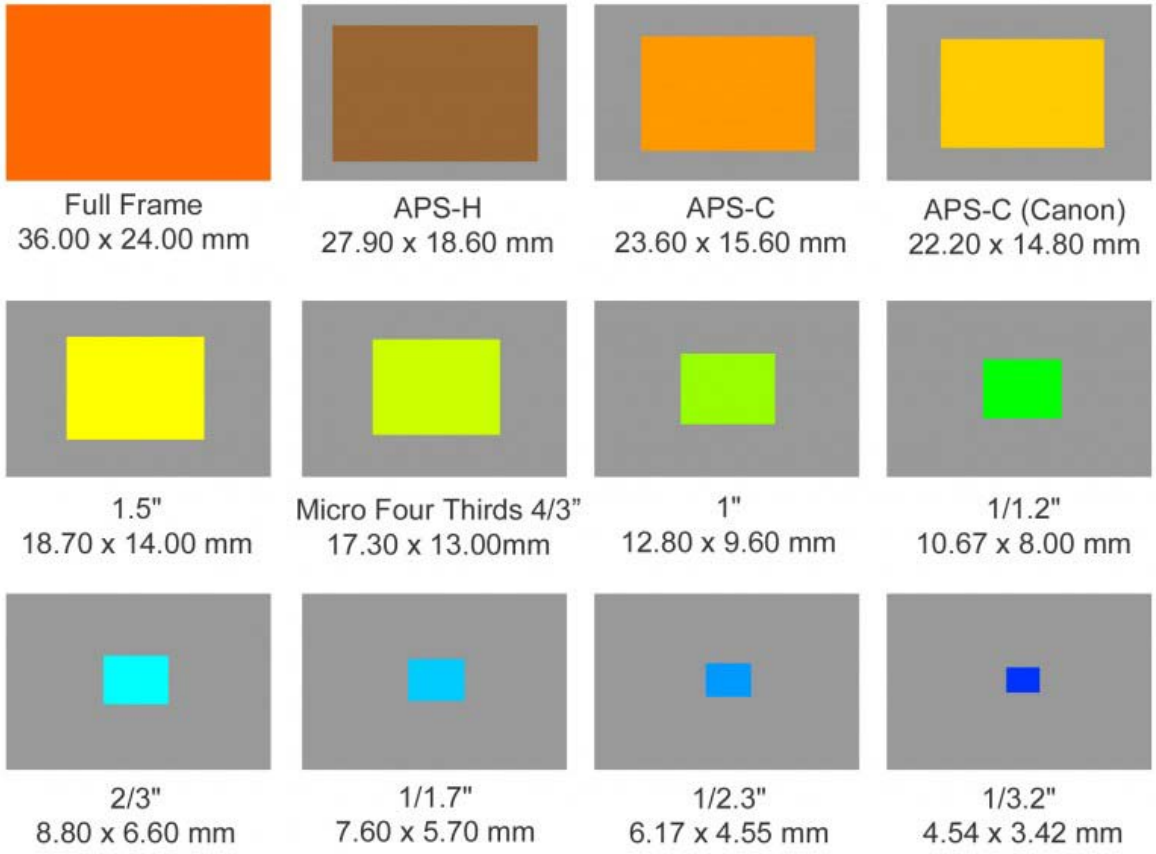

Full Frame (FF) or Short Frame

36×24 mm film: Originated in 1920 in *Leica* camera by Oscar Barnack

https://en.wikipedia.org/wiki/35_mm_format

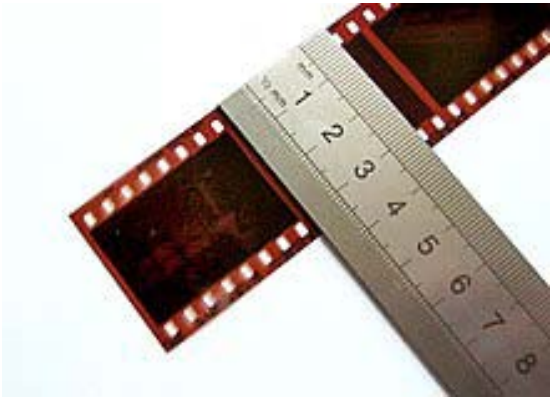

The so-called 35 mm photographic format measures 24×36 mm. It is named for the 35 mm width of 135 film (introduced by Kodak in 1934)

https://en.wikipedia.org/wiki/Film_format

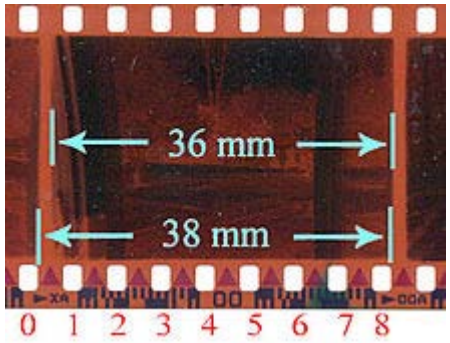

https://en.wikipedia.org/wiki/135_film

Field of View

CCD/CMOS Sensor Arrays Sizes in Digital Cameras

Sensor Name	Medium Format	Full Frame	APS-H	APS-C	4/3	1"	1/1.63"	1/2.3"	1/3.2"
Sensor Size	53.7 x 40.2mm	36 x 23.9mm	27.9x18.6mm	23.6x15.8mm	17.3x13mm	13.2x8.8mm	8.38x5.59mm	6.16x4.62mm	4.54x3.42mm
Sensor Area	21.59 cm²	8.6 cm²	5.19 cm²	3.73 cm²	2.25 cm²	1.16 cm²	0.47 cm²	0.28 cm²	0.15 cm²
Crop Factor	0.64	1.0	1.29	1.52	2.0	2.7	4.3	5.62	7.61
Image									
Example									

Sensor Sizes in different cameras (the relative size of the sensors in the table is done to scale)

$$\text{Crop Factor} = d_{35mm} / d_{sensor}$$

https://lensvid.com/technique/why-depth-of-field-is-not-effected-by-sensor-size-a-demonstration/

CCD/CMOS Sensor Arrays in Digital Cameras

CCD = *Charged Coupled Device*
CMOS = *Complimentary Metal Oxide Semiconductor*

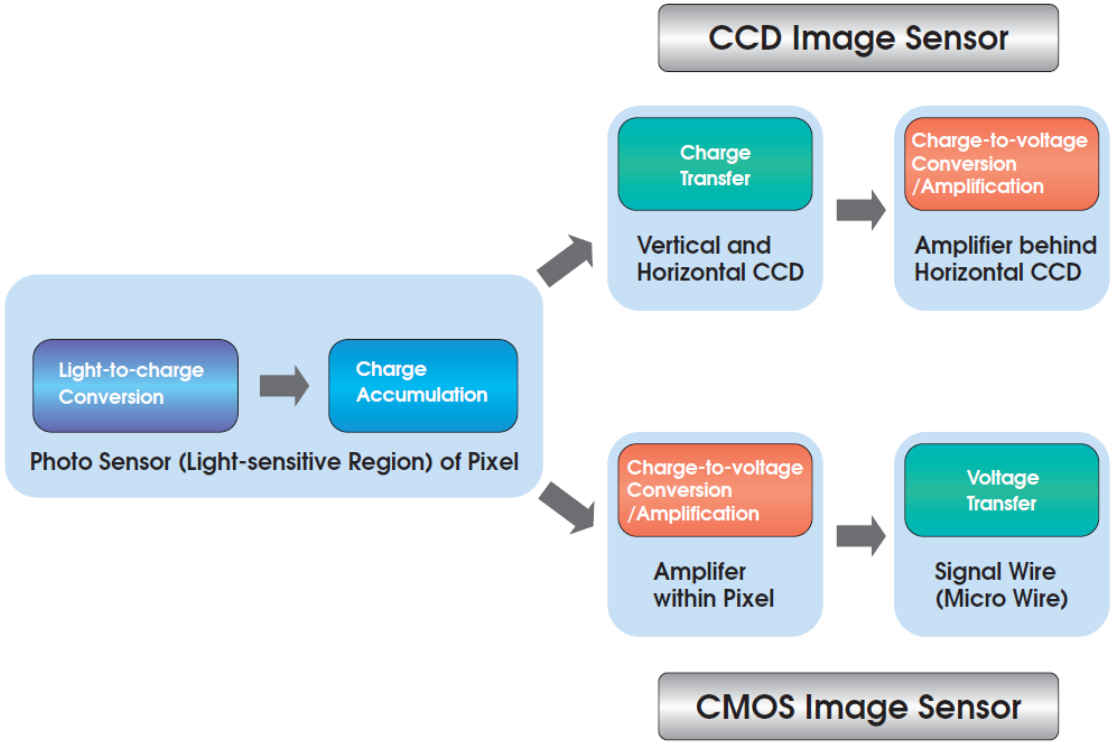

https://pro.sony.com/bbsccms/ext/BroadcastandBusiness/minisites/NAB2008/docs/CCD_CMOS.pdf

CCD Sensor Arrays in Digital Cameras

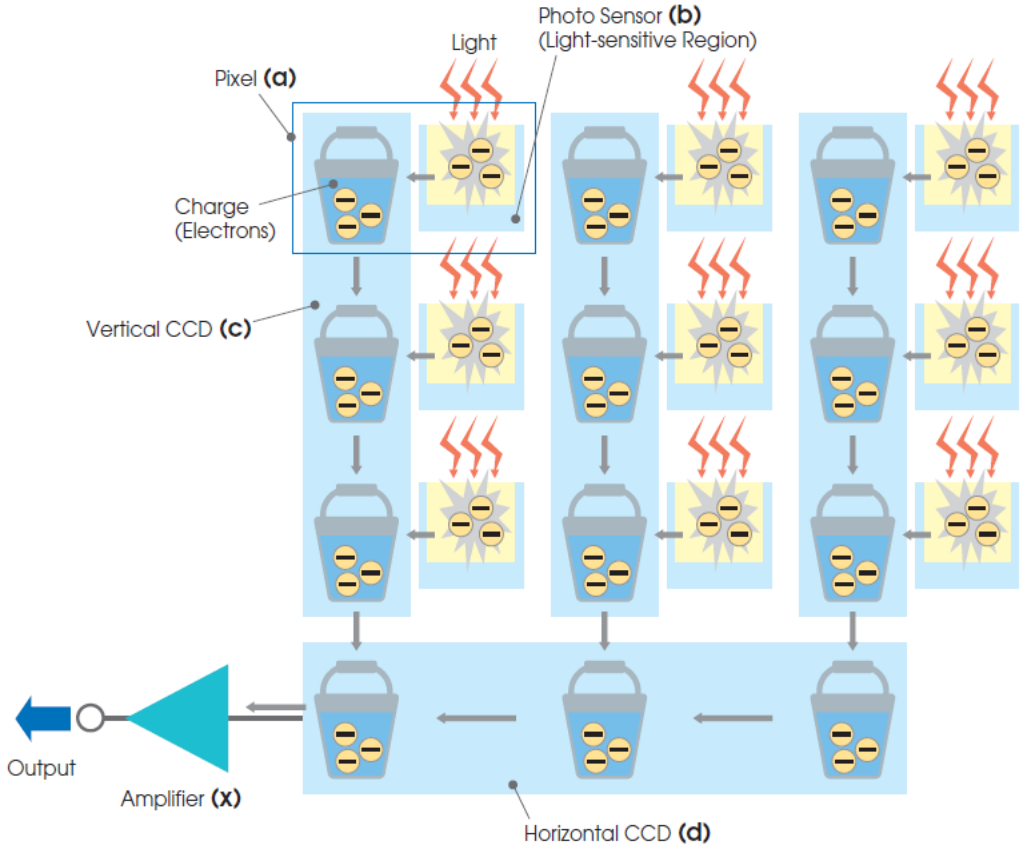

https://pro.sony.com/bbsccms/ext/BroadcastandBusiness/minisites/NAB2008/docs/CCD_CMOS.pdf

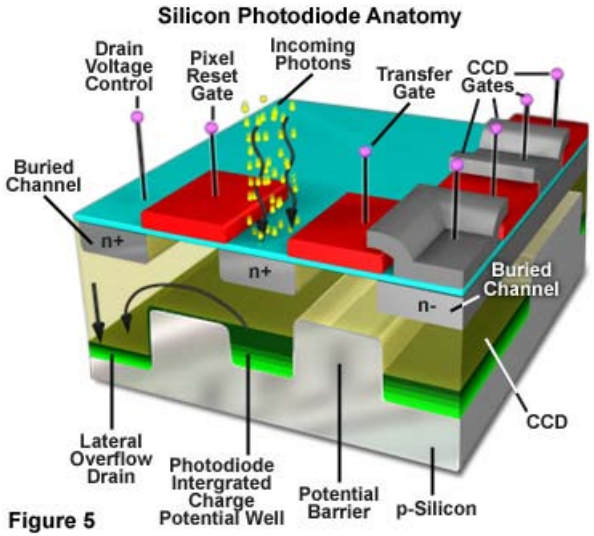

Figure 5

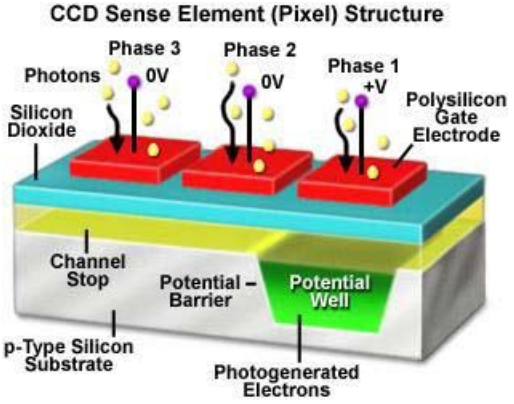

http://zeiss-campus.magnet.fsu.edu/print/basics/digitalimaging-print.html

CMOS Sensor Arrays in Digital Cameras

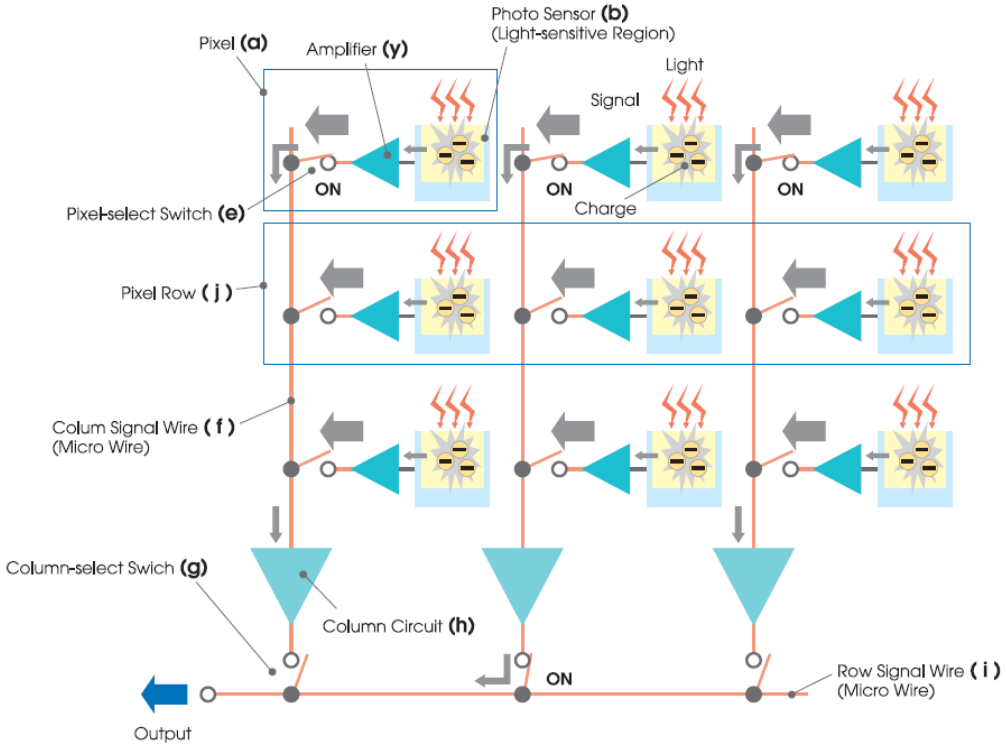

https://pro.sony.com/bbsccms/ext/BroadcastandBusiness/minisites/NAB2008/docs/CCD_CMOS.pdf

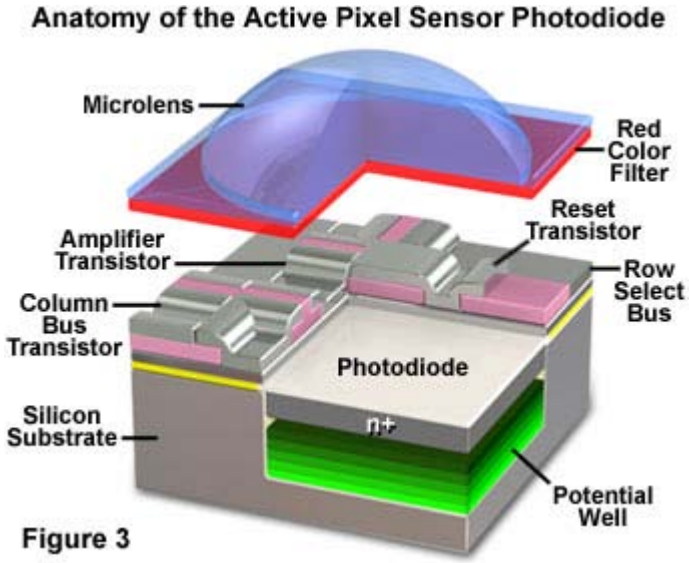

https://micro.magnet.fsu.edu/primer/digitalimaging/cmosimagesensors.html

CCD/CMOS Sensor Arrays in Digital Cameras

CCD Array

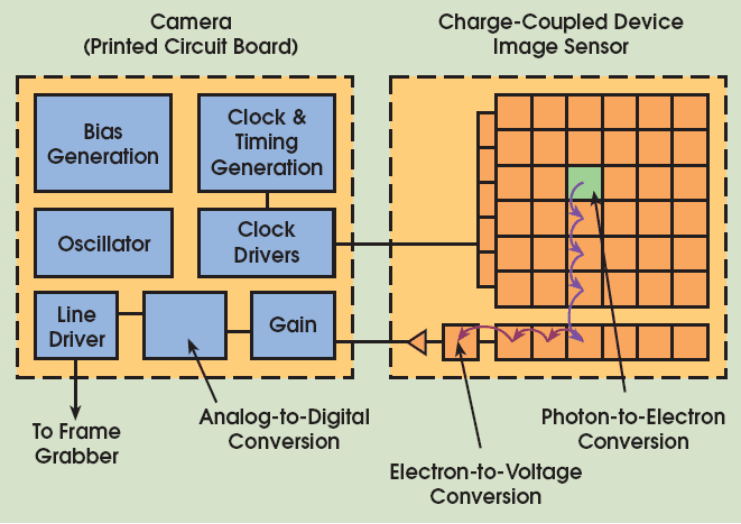

On a CCD, most functions take place on the camera's printed circuit board. If the application's demands change, a designer can change the electronics without redesigning the imager.

CMOS Array

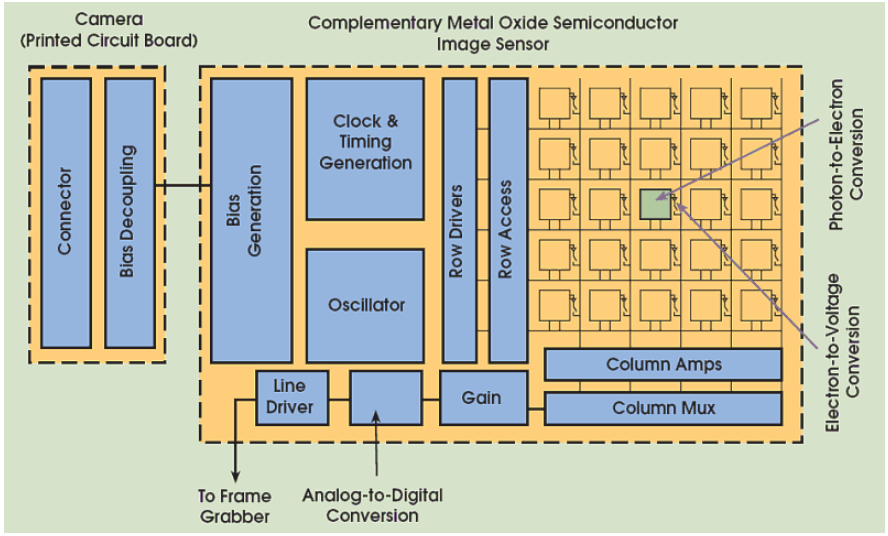

A CMOS imager converts charge to voltage at the pixel, and most functions are integrated into the chip. This makes imager functions less flexible but, for applications in rugged environments, a CMOS camera can be more reliable.

http://cowboyfrank.net/webcams/CcdCmos.htm

http://www.teledynedalsa.com/corp/search/litwiller-CCD-CMOS/

CCD/CMOS Sensor Arrays in Digital Cameras

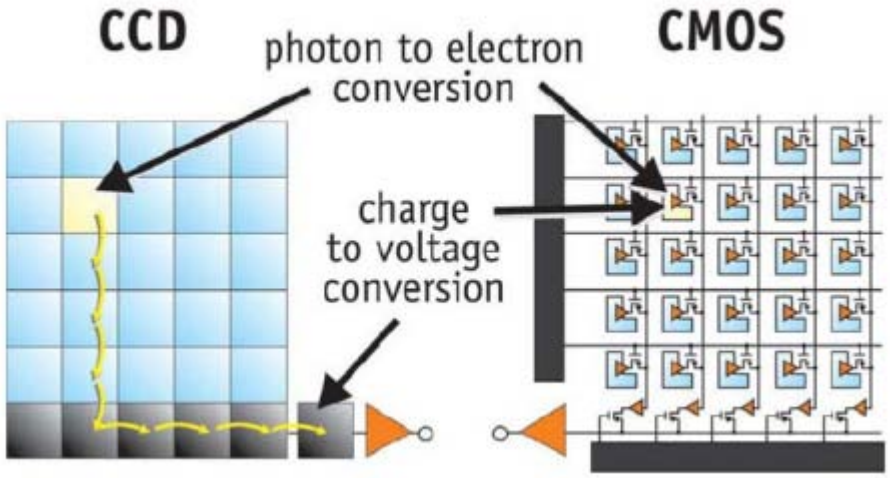

Feature	CCD	CMOS
Signal out of pixel	Electron packet	Voltage
Signal out of chip	Voltage (analog)	Bits (digital)
Signal out of camera	Bits (digital)	Bits (digital)
System Noise	Low	Moderate
Performance		
Responsivity	Moderate	Slightly better
Power Consumption	High	Low
Sensitivity	High	Moderate
Resolution	High	High
Cost	High	Low

http://www.unifore.net/analog-surveillance/security-camera-ccd-vs-cmos-image-sensor.html

CCD/CMOS Sensor Arrays in Digital Cameras

CCD

The **pros** of these types of sensors include: excellent reproducibility and output uniformity, top quality conversion from analog to digital imaging, low noise or distortion of the images, better light sensitivity. Their **cons** are that they are more expensive than CMOS cameras, they use a lot more power and are much slower than the other type of sensors.

CMOS

The **pros** of the CMOS sensors are that they have a much higher readout speed than CCD, they are less expensive, they use less power, they are smaller so they can fit in tighter spaces and they are easier to use. The **cons** of CMOS cameras include their lower uniformity in the output, the varying sensitivity, and linearity between pixels, the images produced can be distorted or feature noise.

https://myventurepad.com/ccd-or-cmos-which-camera-is-better-for-your-business/

Color Digital Sensor Photography

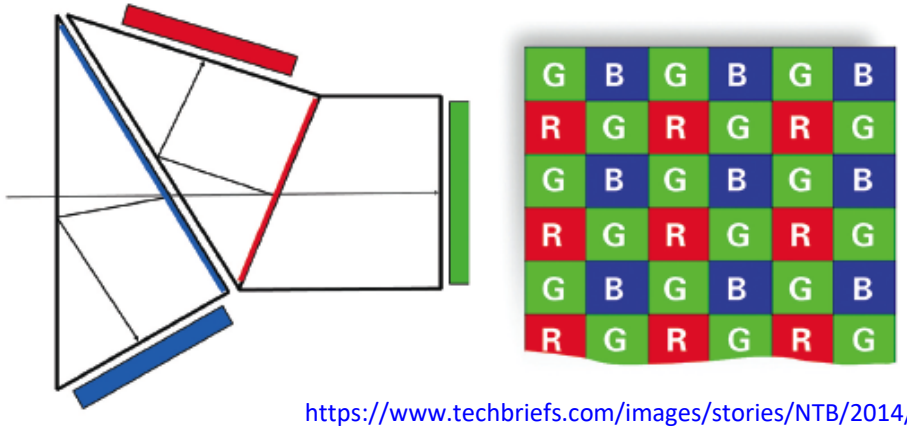

https://www.techbriefs.com/images/stories/NTB/2014/features/49747-200_fig1.png

In 3-chip cameras, dichroic prisms separate light between green, red, and blue wavelengths with dedicated sensors for each channel (left). In 1-chip cameras, colored filters are placed on each pixel (Bayer filter shown) (right).

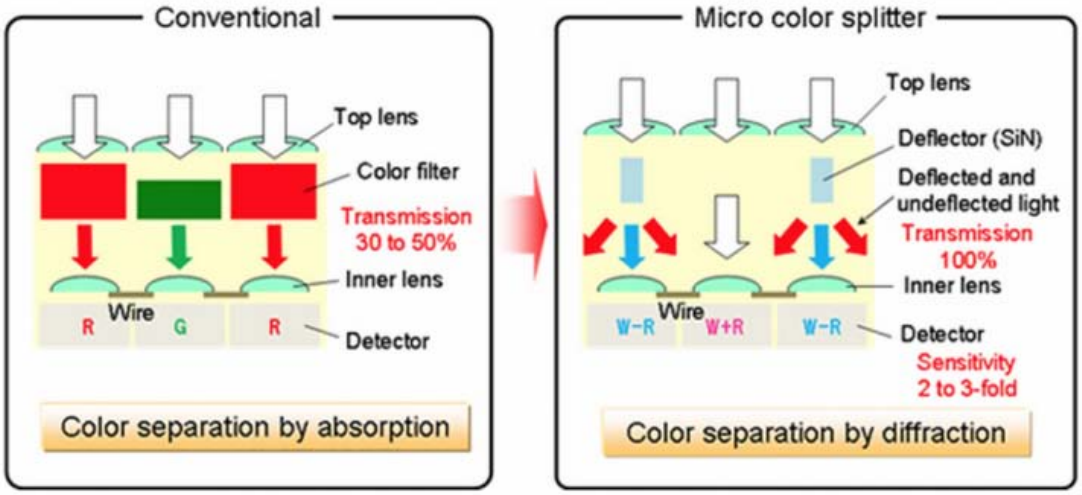

https://nofilmschool.com/2013/02/panasonic-micro-color-diffracting-sensor

Color Digital Sensor Photography

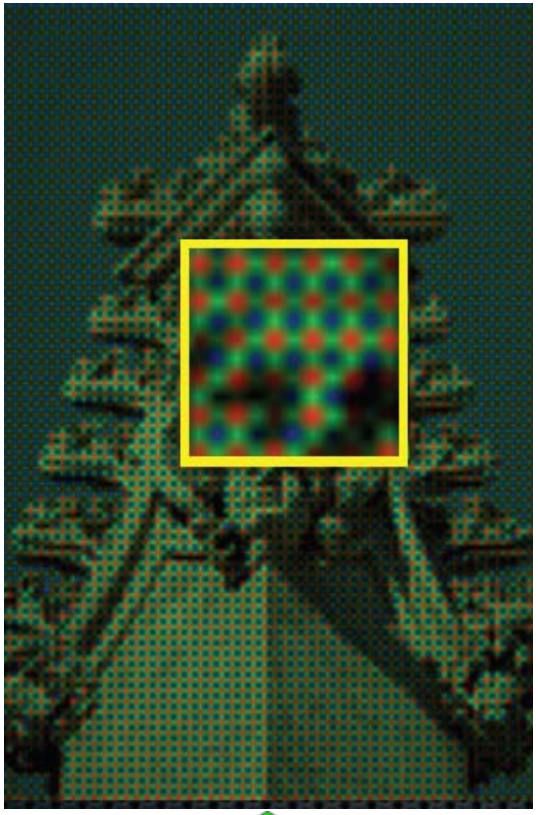

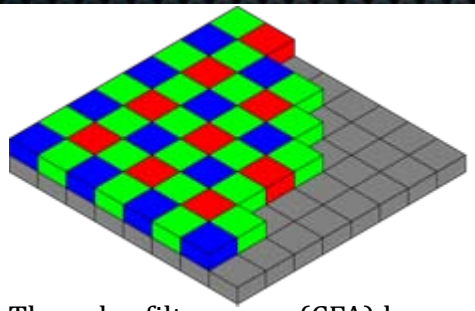

The color filter array (CFA) has a checkerboard appearance with three colors instead of two

Interpolation Between Samples

Combine Color Channels

http://omarsakhi.com/3592.html

Color Film Photography

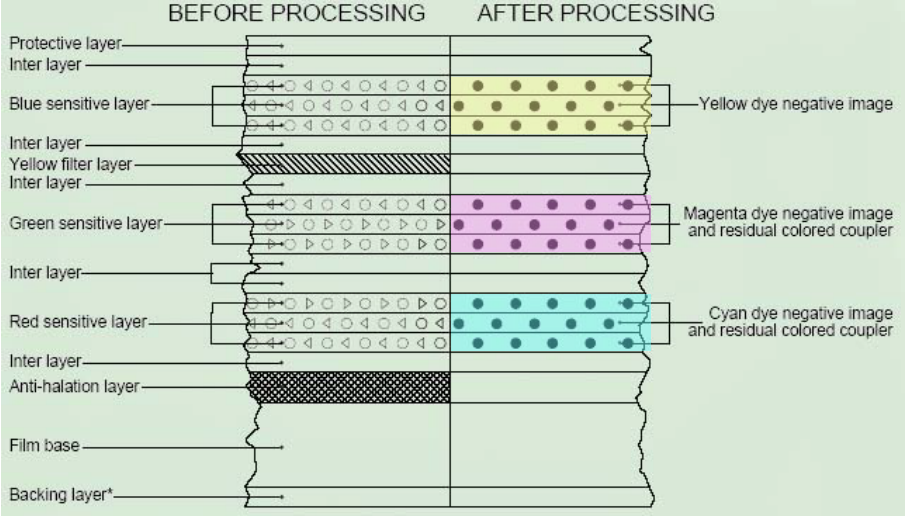

http://www2.optics.rochester.edu/workgroups/cml/opt307/spr04/jidong/filmstructure.jpg

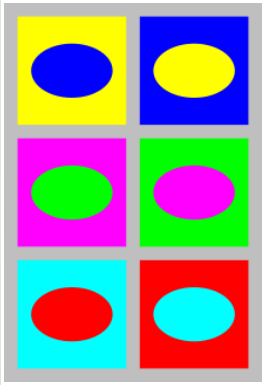

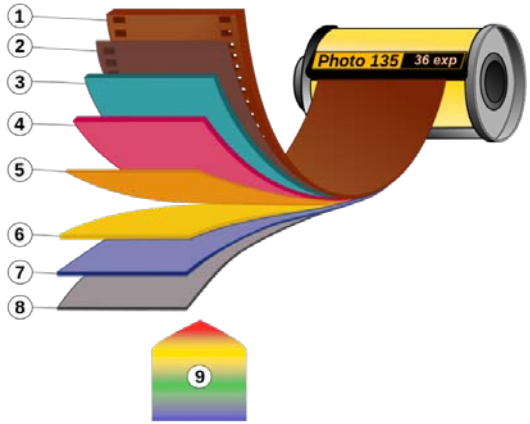

Layers of 35mm color film: 1. Film base; 2. Subbing layer; 3. Red light sensitive layer; 4. Green light sensitive layer; 5. Yellow filter; 6. Blue light sensitive layer; 7. UV Filter; 8. Protective layer; 9. (Visible light exposing film).

https://en.wikipedia.org/wiki/Photographic_film

The sensitive elements in the film are crystals of, most often, **silver halide** which can change their structure when excited by light (photons). In general less sensitive films (slower films) have finer grains that are closely packed and more sensitive films (faster films) have courser grains. The reason for the sensitivity relationship to grain size is related directly to how the grains are converted from a stable non-developable state to another stable state (latent state) from which they can be developed chemically. When a photon of light strikes a grain it dissipates its energy in the crystal (grain). This energy may or may not be enough to flip the crystal into a latent state. Generally it takes a few photons to flip the grain (depending on its size and sensitivity). In the meantime, thermal energy is jiggling the grain and tending to drop it back into its normal state. If enough photons strike the grain in a given time, the grain flips to a latent state and sticks there. We then have a grain that can be turned opaque chemically. The darkness of the image is more or less proportional to the light striking the film. It takes about the same number of photons to flip a large grain as a small one. Since the larger grain intercepts more light more of the larger grains will be flipped and thus less light is required to create a latent image. This later phenomenon makes coarse grained films faster (more sensitive). All the silver halide salt particles reside in some emulsion layer depositing on the base layer of films. Color film has three layers of emulsion for three kind of silver halide which are sensitive for the light of 3 different light wavelengths.

Angle of View

CCD/CMOS Sensor Arrays Sizes in Digital Cameras

Kodak KAF 50100 CCD Array

Resolution: **8176 x 6132**
Total Resolution: **50.1 MegaPixel**
Pixel Size (μm): **6.0**
Dimensions (mm) : **49.1 x 36.8**
Diagonal (mm): **61.3**
Max Frame Rate (fps): **1.0**
Configurations: **Monochrome/Color**

http://www.truesenseimaging.com/component/sobipro/64-kaf50100?catid=&Itemid=114

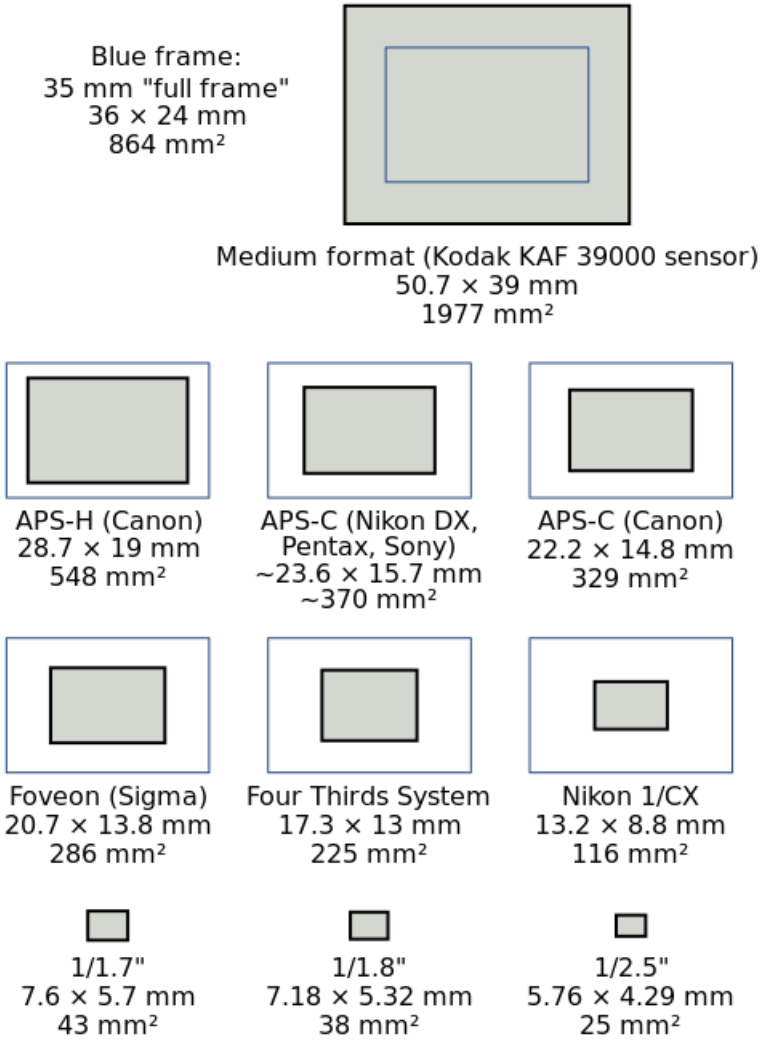

Angle of View

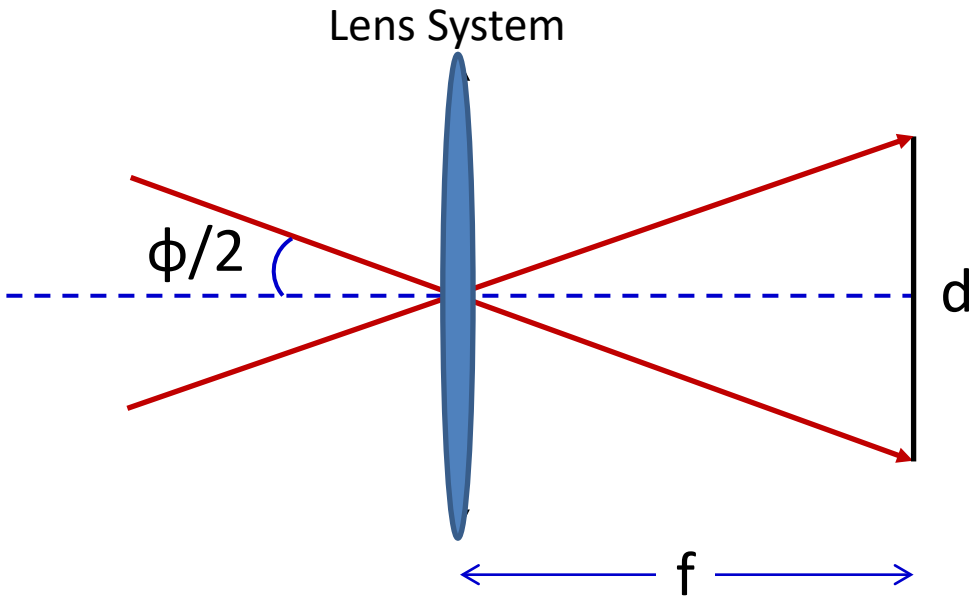

$$\phi = 2\tan^{-1}\left(\frac{d}{2f}\right)$$

$$\phi \simeq \frac{d}{f}$$

Angle of View

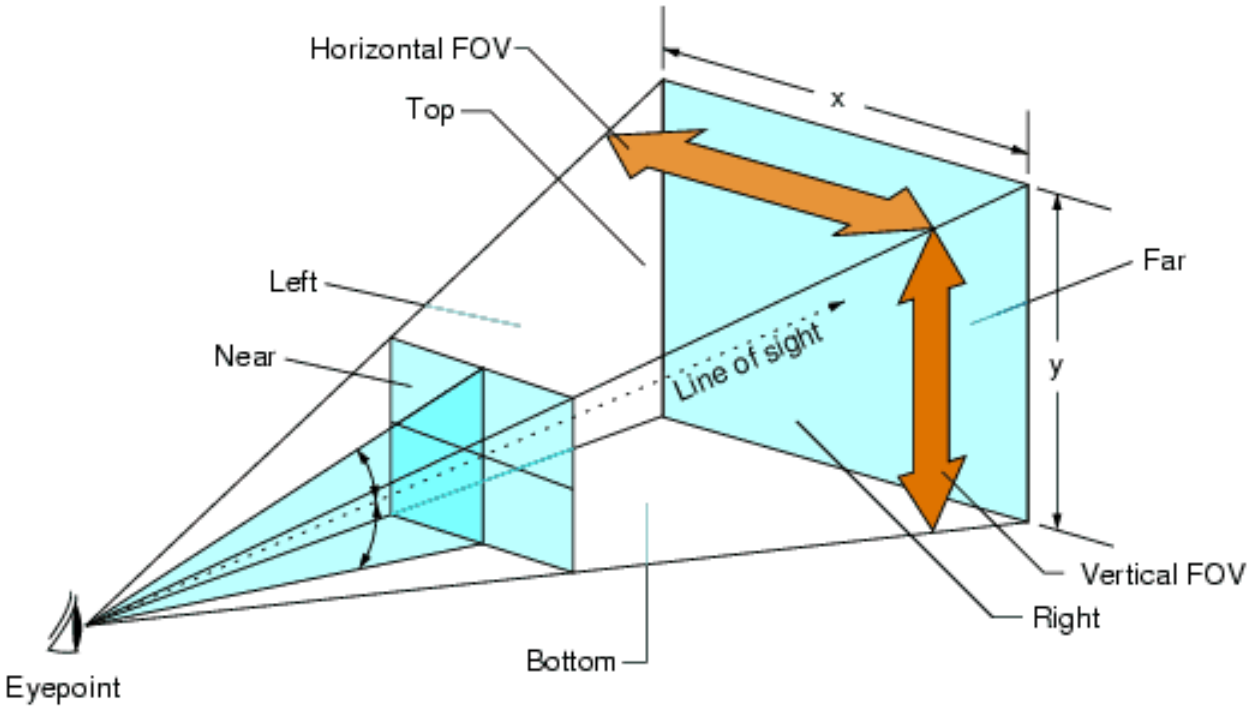

$$\text{Aspect Ratio} = \frac{y}{x} = \frac{\tan(\text{vertical FOV}/2)}{\tan(\text{horizontal FOV}/2)}$$

http://pcgamingwiki.com/wiki/File:Fov_diagram.png

Angle of View (Zoom)

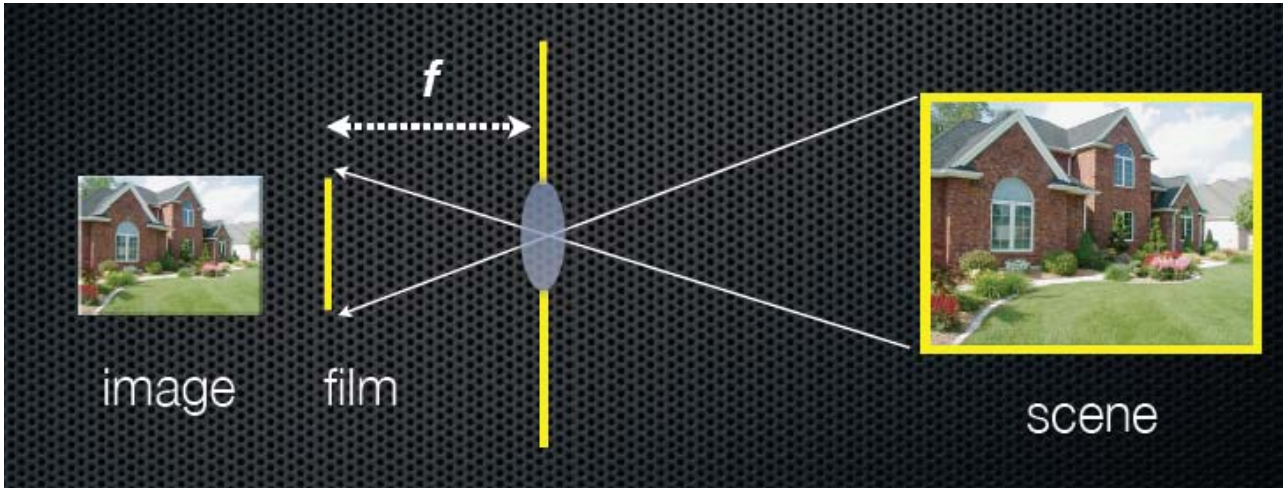

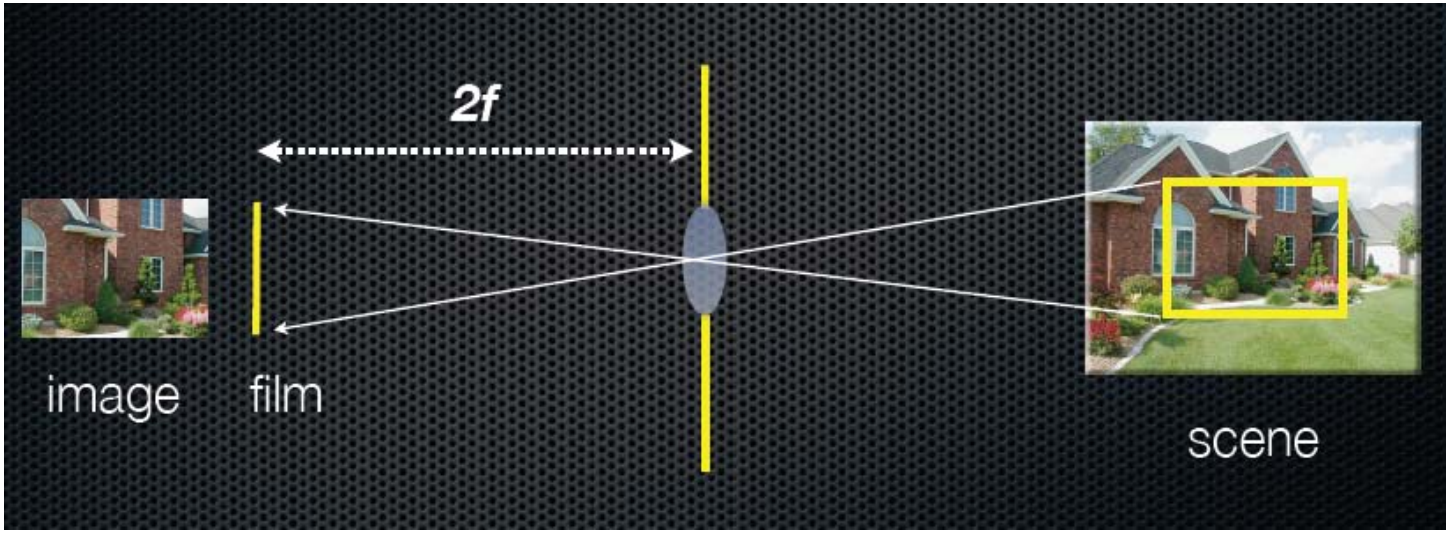

Angle of View (Zoom)

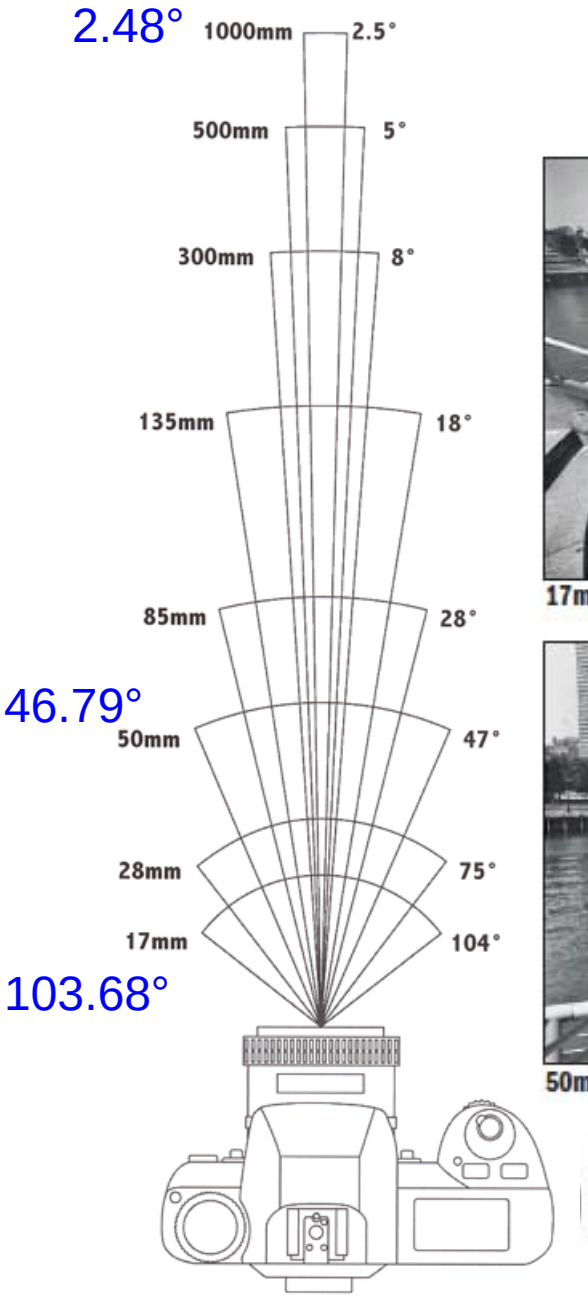

17mm

28mm

50mm

85mm

From London and Upton

http://graphics.stanford.edu/courses/cs178-12/lectures/image-formation-03apr12.pdf
http://graphics.cs.cmu.edu/courses/15-463/2012_fall/Lectures/camera.ppt

Angle of View (Zoom)

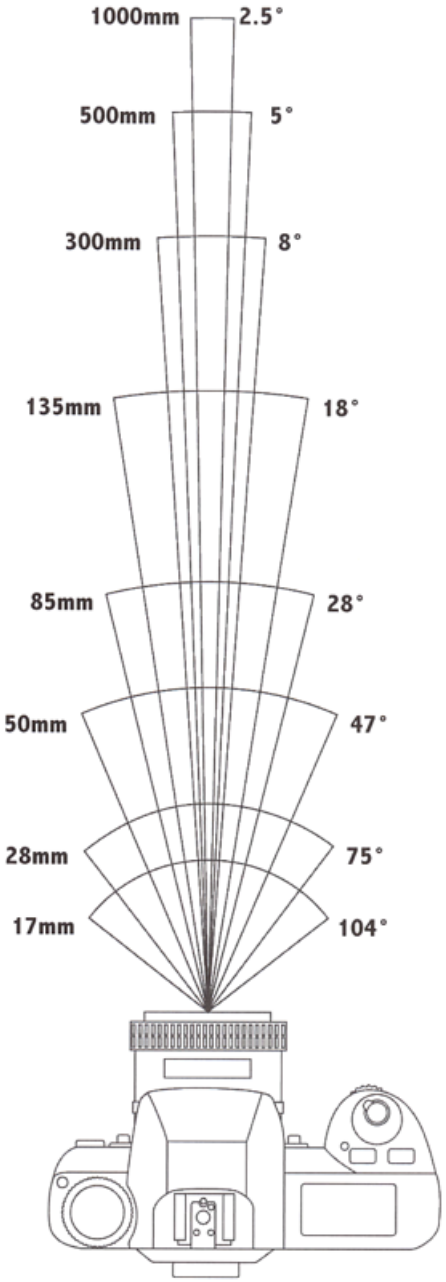

135mm

300mm

500mm

1000mm

From London and Upton

http://graphics.stanford.edu/courses/cs178-12/lectures/image-formation-03apr12.pdf
http://graphics.cs.cmu.edu/courses/15-463/2012_fall/Lectures/camera.ppt

Effect of Shutter Speed

Freezing Motion

Walking people	Running people	Car	Fast train
1/125	1/250	1/500	1/1000

Effect of Shutter Speed & Aperture

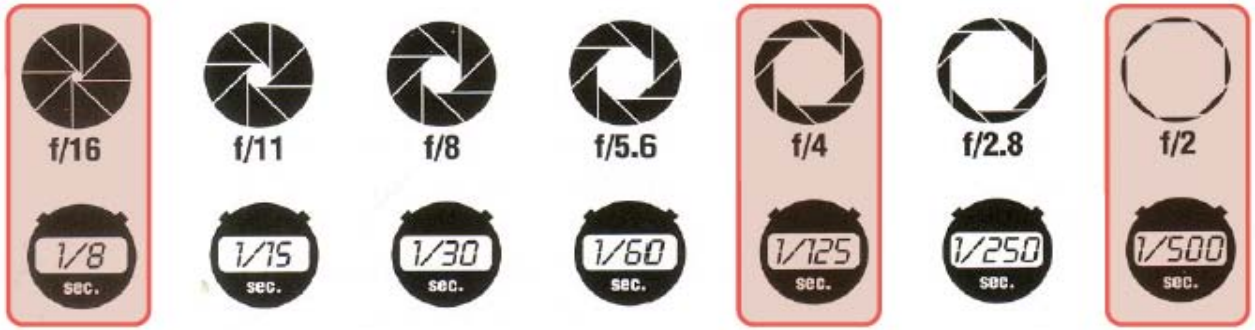

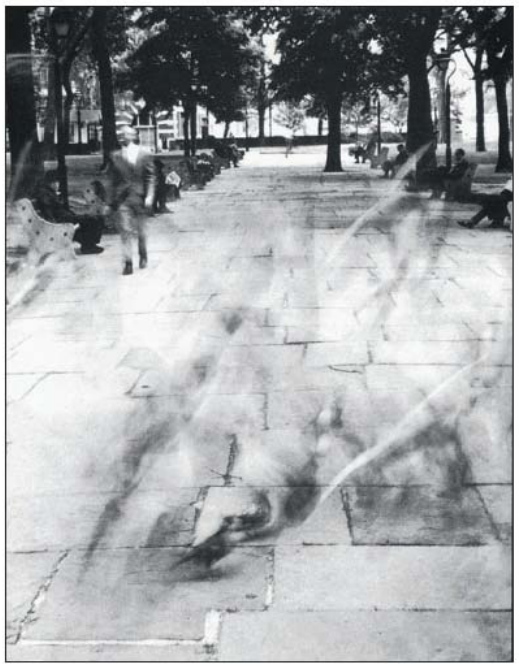

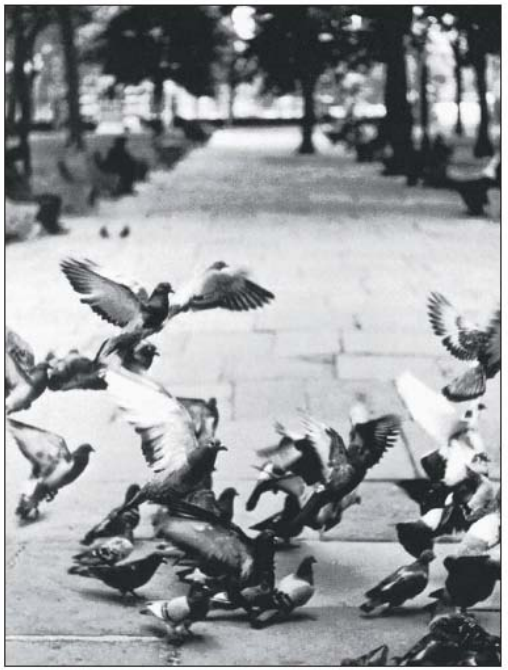

https://www.cs.dartmouth.edu/~wjarosz/courses/cs89-fa15/schedule.html